MADE IN BRITAIN

sievmaster
by farleygreene

# Industrial Sieving & Screening Equipment

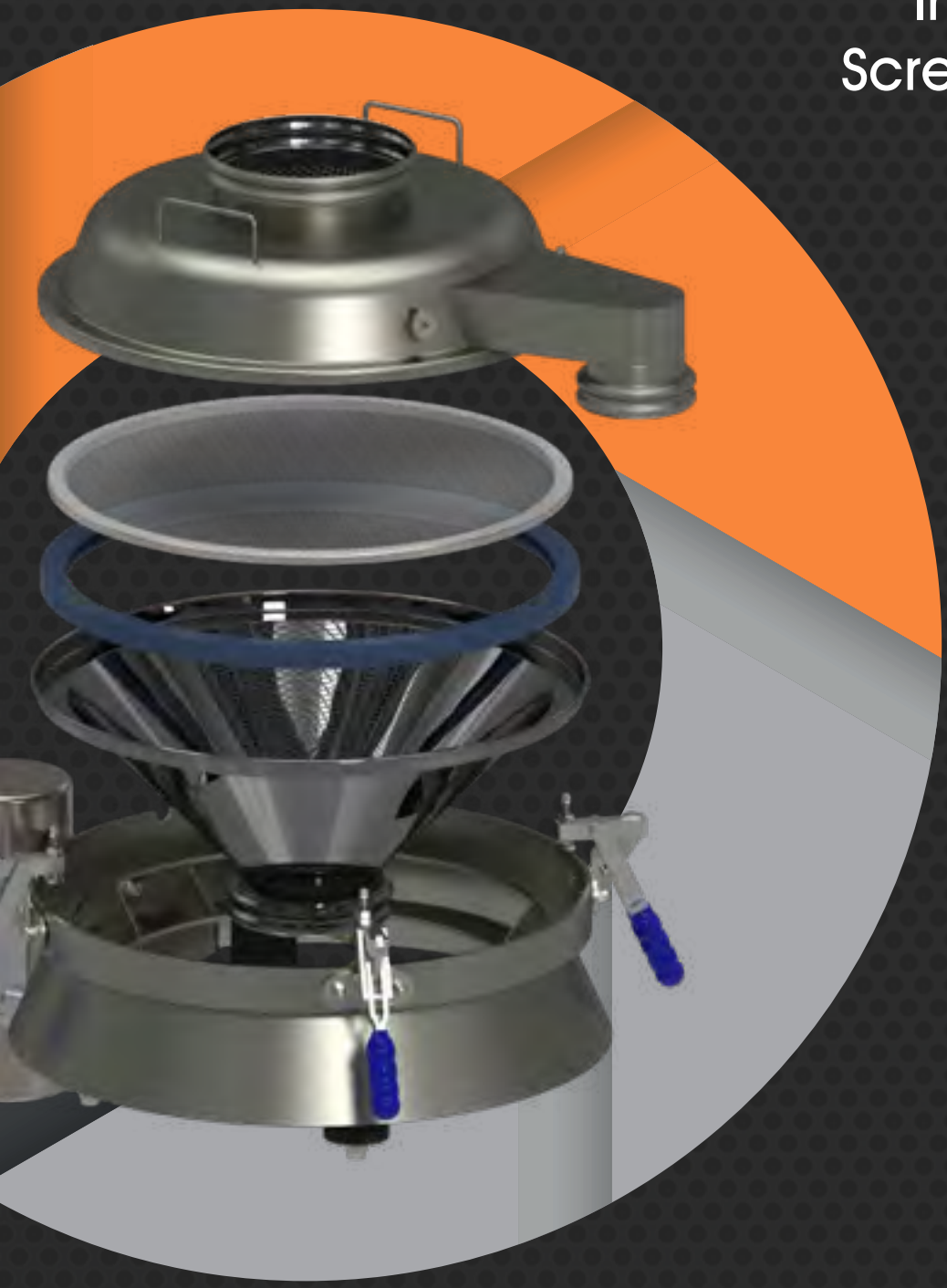

farleygreene.com

# Contents


02 - 03 • Introduction to Farleygreene

04 - 05 • Outline of Sieving Machinery

06 - 07 • Industries We Serve

08 - 11 • Artisan Range

12 - 15 • Slimline Range

16 - 18 • Slimline VS/PS Range

19 - 21 • Slimline Easilift Range

22 - 24 • Multiscreen Range

25 • 700-ST

26 • Segregator Range

27 - 30 • Rota Range

32 - 33 • Ultrasonic Systems

34 • After Sales Support

35 • Process Systems & Equipment

36 - 37 • Choice of Mesh

38 - 46 • Technical Drawings

# Sieving Partners You Can Trust

We provide sieving and screening solutions to businesses across the world. Our mission is to deliver distinction in our field of expertise, developing flexible modular design, along with clear and concise communication to distribute our product information.

Utilising the latest software, online platforms and manufacturing practices we offer the processes, tools and information that our customers and partners require. This ensures that finding the correctly specified and priced equipment is an easy, composed, courteous and affable experience.

## We Understand Your Needs

Farleygreene has the answer to your needs; with our constant dedication to customer service and R&D, our tailored approach exceeds customer expectations. Furthermore, our commitment to maintaining strict working practices has been recognised by being awarded ISO 9001 certification, guaranteeing a high level of quality throughout the process.

Our customers come to us to solve very specific problems:

> Lack of confidence with existing suppliers
> Maintain product quality & throughput to meet set production targets
> Prevent process contamination
> Maintain a high standard by fitting certified and traceable equipment

Our machines are designed to address all these issues to give you complete peace of mind.

# The Benefits We Deliver To Our Customers

Using approved solutions, we work with you to design and build machines to meet your specific requirements; which means your equipment performs as required.

> Instead of taking a "one size fits all" approach, we adapt our machines to suit your processes. This provides improvements in both efficiency and quality.
> Our machines can be stripped down without tools which ensures there can be no associated contamination or health and safety issues.
> The majority of our machines are ATEX approved as standard.
> We offer a full spares & service package which will ensure years of problem free operation.
> All equipment is supplied with certified & traceable components as well as relevant documentation to comply with audit procedures.
> All our machines are manufactured in compliance with both FDA & various other EC regulations such as EC1935/2004.
> We provide a re-meshing service for existing rings or frames, irrespective of the original supplier.

## Our Guarantees To You

While our sieves are designed to give you total confidence that your end-product will meet your quality control specification we go further and offer you two guarantees:

1. While the industry standard is to offer sieving machines with a 12 month warranty, our machines are covered for 24 months against breakdown or malfunction.

2. We guarantee that our machines will perform to the level agreed. If for any reason it fails to perform to the agreed standard, we will either adapt or replace the machine or if necessary refund your money.

## Hire & Demo Equipment

We have an extensive fleet of machines available for hire and demonstration or alternatively we can conduct free* in-house trials for you which are filmed and posted to YouTube channel.

Please contact us for current availability as our stock is constantly changing.

*Subject to mesh ring stock, we may need to charge for non-standard fine meshes.

## Free One Week Trial

Before you make the decision to buy a new sieve, you may want to check beforehand that it meets your requirements.

We welcome you to trial a machine free for one week in your premises*, with the option of extending this at a reasonable weekly rate.

We will deliver the sieve to you but ask that you arrange for it to be returned to us after the trial. If having read through this brochure you need any further information, please give us a call on +44 (0) 1256 474 547 or email info@farleygreene.com

*depending on global location

# Outline of Sieving Machinery

Product sieving is now an essential requirement in nearly all industries. To obtain a quality-controlled end product not only requires diligent constituent choice but careful handling and processing. Removal of any substandard or unwanted matter is therefore a prime requirement.

A SIEVE is a SIEVE, is a SIEVE; a statement often used by the unknowing - but not all sieves are created equal. Choosing a sieve can be a daunting task, not only are there a number of manufacturers purporting to provide the answer to your needs but the choices of differing types, sizes and configurations make the process even more bewildering. Do you choose new



or second hand? Round or square? Buy through an agent or from a manufacturer? Can the supplier support the sale with spares back up, can they support the sale with engineering back up, can they supply all those necessary items to ensure that you can connect your existing or new equipment to the sieve? Is the unit in a hazardous area?

All considerations when making that purchasing decision. Then there is the consideration of price, too expensive? Are you getting value for money? Too cheap? Is the quality of the product suspect? Will it last? It sounds obvious, but the first consideration should be; 'What is the sieve to be used for?'.

This fundamental consideration is so often overlooked, but ensuring the requirement is correctly specified will narrow down the choice process. Assistance is always available from Farleygreene for you to evaluate the best options for your application. Screening trials can also be carried out on site or within our test facility to fully prove the process.

## Check Sieving

This is the most straightforward arrangement for sieving and in general terms the most popular system in use. Check sieving can be carried out in many differing configurations.

Not all companies require large size sieves, those wishing to separate high cost low volume products very often require small table top sieves. The Artisan range can provide the ideal solution for this. Based upon the need to check sieve and retain oversize product or foreign bodies, these machines are available with enclosed top screen systems that allow the screen and pan to be removed in one. The E400 is a completely modular concept which allows switching between check sieving and grading within one unit.

The most common continuous or batch process option is to position a Sievmaster Slimline unit directly into the flow line of the product, at the beginning or at the end of the production line dependent upon the need. Alternatives include the incorporation of a bag 'rip and tip' station, allowing users the facility to unload sacks of material directly into the process.

## Linear Screeners

As the name suggests, this arrangement moves the product along a rectangular mesh, rather than a circular one. The product is not restricted upon the mesh and it uses gravity as an aid to movement. This type of machine is ideally suited to those products which have a high proportion of oversize material, where it requires de-dusting or de-watering. Especially useful in those areas in the food industry where spices, vegetables or biscuits need separating from unwanted, broken or undersized product. The product travels in a controlled 'bounce' along the screen e.g. in a forward straight motion lifting from the screen thus re-presenting each particle as it travels along. Specially designed parallel screen systems can also aid throughput and separate the most difficult wet and dry products along with soft gel capsules or tablets.

## Grading Separators

Where a product flow needs to be separated in to fractions of different sized particles, multi-screened machines should be considered. This is especially effective where the process is continuous, and more space and cost efficient than cascading product from one sieve to the next. Normally, up to three mesh screens can be incorporated in to a single machine, providing an oversize cut, a large cut, a small cut, and a fine cut of the product. These and other units can be fitted with an ultrasonic de-blinding system for difficult powders that may blind the mesh aperture. Rubber balls and sliding collars can also be fitted under the screen as a more economical method of mechanically deblinding the mesh.

Multi-screen machines are available in various sizes starting with 400mm and increasing to 800mm, 1200mm and 1500mm diameters. Modular in their design users can easily switch from single screen with simple fines and oversize, to 3 or 4 cuts.

## Vacuum / Pressure Sieving

Where toxic products or those containing very fine, airborne dust require sieving and there is a danger of contamination to personnel and the surrounding atmosphere, vacuum/pressure sieving has many advantages. However, this type of sieving is not restricted to these product types and can work with any product that can be conveyed pneumatically. A pneumatic conveyline is utilised to enclose the product, with a short flexible pipe connecting it directly to the inlet and outlet of the sieve. The product is drawn or blown through the tube, via under or over pressure, then passes through the mesh and is again transferred from the sieving machine to the receiving hopper or next process. When dealing with problem products this arrangement provides a simple and cost-effective method of ensuring no leakage. The units can be very simply inserted into existing pipework systems with minimal disruption and line reconfiguration. This system can be applied to most types of sieving machine, but airtight connections must be maintained to ensure efficient flow and throughput.

## Centrifugal Sifters

Designed to provide users with an efficient, dust tight, high throughput sieving machine, the Sievmaster Rota series gives accurate material screening with continuous fine and coarse discharge. The machine is especially suitable for high volume sieving, lumpy, sticky and dusty products. Product is sieved on a continuous basis and very large quantities can be processed quickly.

Units can be fitted to process lines easily, as the units are non-vibratory, they are 'bolted' within the system via the inlet and outlet flanges. The Sievmaster Rota range can also be configured with a lump breaking aspect, and also features a fully dedicated lump breaker and sieve in one solution option called the Disintegrader. Both these options are perfect for deagglomerating stored powders or kibbling of cinder toffee, biscuits and other confectionary items.

## Ultrasonic Sieving

The use of ultrasonic sieving can, in some instances, provide added benefits when sieving fine powders. The introduction of very high frequency vibration (ultrasonic wave length) to the mesh produces a fluidising effect to the mesh wires, the theory being that the product 'slips' through the mesh more readily than by normal low frequency vibration. This system works well on some products but not all. Tests are important to provide the correct specification. It is especially useful for products such as toner or metals powders used in additive manufacturing environments. Recent internal and site tests have also proven its useful incorporation for high capacity check sieves, as the system provides a constant mesh cleaning function which reduces powder build up on the mesh.

FARLEYGREENE SIEVING TECHNOLOGY

# Industries We Serve

Since 1976 Farleygreene have been designing and manufacturing certified sieving solutions to customers from a wide range of industries. We supply sieves to almost every industry sector but in particular to the food and drink, pharmaceutical, chemical, nutraceutical, reclamation and recycling, and additive manufacturing industries.

All machine parts can include full traceability, surface roughness measurements, As Built Drawings and FAT testing documentation.

## Food & Drink

Our Sievmaster range has been designed to meet the growing food industry standards (EC1935/2004, ATEX, FDA). We have a large range of options available to meet various throughputs without compromising on strict hygienic requirements.

## Pharmaceutical

We have worked with companies such as GSK, TEVA & Pfizer to support the pharmaceutical industry in the supply of contamination free end products. Our standalone vacuum check screener can be easily fitted in existing process lines to safely grade even the most fragile ingredients in hygienic conditions.

## Chemical

Our sieving solutions play a key role in the chemical industry to ensure products are validated post process. Through our experience in both liquid and solid processing, our technology has demonstrated its benefits in separating various chemical end products such as solvent based paints.

## Nutraceutical

Our experience in the demanding food & pharmaceutical industries has allowed us to expand into the ever growing and highly sought-after nutriceutical industry, where quality plays a critical role in the validation of the end product.

## Reclamation & Recycling

Our solutions integrate with factory equipment to ensure optimum separation, reclaim residual product, and help reduce production costs. Our Multiscreen range has been recently updated to increase separation performance on all decks and is available in different diameters to fit various process configurations.

## Additive Manufacturing

Our Sievmaster range can be adapted to meet additive manufacturing requirements. Alternatively, our Sievgen range is used specifically for recycling and validating powders throughout the additive process. These units are designed to reduce downtime and fit seamlessly into both R&D and production environments.

# Artisan Range

## SM 200-S Batch Sieve

### Vibratory Sieve for Check Screening Small Batches

The Sievmaster 200-S provides users with a 200mm diameter, all stainless steel check sieve at an affordable price.

This sieve ensures the integrity and quality of ingredients and product to the end user. It is designed to sit directly on top of a container; ingredients can be tipped into the top hopper and check sieved straight through into the container below. It comes with 3 mesh inserts for coarse, medium & fine/liquid applications. Other meshes can be provided as part of a meshed top hopper assembly.

**INDUSTRIES**

Food & Drink | Pharmaceutical | Chemical | Nutriceutical | Reclamation & Recycling | Additive Manufacturing

## FEATURES

- Constructed from FDA compliant materials
- Low maintenance / running costs
- No tool, quick change screens
- Easy clean design, no crevices
- Noise level less than 70 dBA when in use
- All stainless steel contact parts
- The machine plugs into a standard domestic power supply which can be matched to the country of use

## TYPICAL MATERIALS

- Spices
- Cosmetics
- Seeds
- Most powders/ granular products
- Flour
- Crystal sugar
- Starch
- Cocoa
- Liquids

## PRODUCT OPTIONS

### Machine configurations*

- Top dust cover

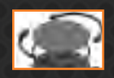

- Top cone meshed

- Bench mounting kit

- Collection bin
- Collection bin cover

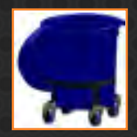

*More options available on request

### Finishes available

- Standard bead blast finish
- Mirror polish to internal surfaces

**CERTIFIED TECHNOLOGY**





# Artisan Range

## SM 500-S

### A Smaller Sieve that doesn't Compromise on Throughput and Accuracy

Designed to provide users with the power for fast product throughputs and accurate check sieving. This economically priced sieving machine will suit those needing to sieve products in smaller batches but still requiring a fast, efficient system.

With just a single hand operated band clamp release, the pre-tensioned mesh assembly and the metal detectable gasket are fully removed making this an easy and quick machine to change products and clean. Each machine is supplied ready to use, just connect and go. The mobile stand provides a simple means of manoeuvring from one location to another, ideal when multi-tasking is essential or external cleaning is required.

**INDUSTRIES**

Food & Drink | Pharmaceutical | Chemical | Nutriceutical | Reclamation & Recycling | Additive Manufacturing

## FEATURES

- Check sieve for use in the food, pharmaceutical or chemical industries
- Noise level less than 70 dBA in use
- Can be used for production sieving into tote bins or mixer bowls
- All stainless steel body and contact parts
- Mobile stand for greater flexibility
- Constructed from FDA compliant materials
- No tool, quick change screens
- Easy clean design, no crevices

## TYPICAL MATERIALS

- Spices
- Cosmetics
- Seeds
- Most powders/ granular products
- Flour
- Crystal sugar
- Starch
- Cocoa

## PRODUCT OPTIONS

### Machine configurations*

- Tote bin / container Mounting

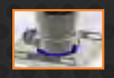

- Addition of underscreen magnet assy

- Top dust cover

- Mesh deblinding - mechanical

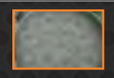

- Mesh deblinding - ultrasonic

- Outlet sleeve

- Top cone meshed

*More options available on request

### Finishes available

- Mirror polish to internal surfaces

**CERTIFIED TECHNOLOGY**

# Artisan Range

## SM E-400-STV

### A Modular Check Sieve with Sack Tip Configuration

The E-400 is a highly flexible and efficient solution for lower volume requirements. Primarily aimed at the food and chemicals market, this modular unit can be adapted to meet requirements as they change, or fit different points in a process.

The E-400's mobile design means it can be easily adapted by the user for check screening, grade sieving or low volume sack tipping.

**This particular model is the sack tip variant.**

**INDUSTRIES**

Food & Drink | Pharmaceutical | Chemical | Nutriceutical | Reclamation & Recycling | Additive Manufacturing

## FEATURES

- This unit can utilise the GRV components to become a grading unit with no other modifications
- Constructed from FDA compliant materials
- Low maintenance / running costs
- No tool, quick change screens
- Noise level less than 70 dBA when in use
- All stainless steel contact parts
- Mobile suppport frame
- Easy clean design, no crevices
- Bag cut out and internal sack rest grid

## TYPICAL MATERIALS

- Spices
- Cosmetics
- Seeds
- Most powders/ granular products
- Flour
- Crystal sugar
- Starch
- Cocoa
- Liquids

## PRODUCT OPTIONS

### Machine configurations*

- Addition of oversize outlet to top gallery c/w oversize control scroll
- Addition of extra deck with outlet, internal cone, mesh ring, clamp & gasket
- Standalone dust extractor
- Operator platform
- Mesh deblinding - mechanical
- Addition of underscreen magnet assy
- Outlet sleeve

### Finishes available

- Mirror polish to internal surfaces

**CERTIFIED TECHNOLOGY**

***More options available on request**





# Artisan Range

## SM E-400-GRV

### A Modular Check Sieve with Grading Configuration

The E-400 is a highly flexible and efficient solution for low volume requirements. Primarily aimed at the food and chemicals market, this modular unit can be adapted to meet requirements as they change, or fit different points in a process.

The E-400's mobile design means it can be easily adapted by the user for check screening, grade sieving or low volume sack tipping.

**This particular model is the grading variant.**

**INDUSTRIES**

Food & Drink | Pharmaceutical | Chemical | Nutriceutical | Reclamation & Recycling | Additive Manufacturing

## FEATURES

- This unit can utilise the STV components to become a sack tipping unit with no other modifications
- Constructed from FDA compliant materials
- Low maintenance / running costs
- No tool, quick change screens
- Noise level less than 70 dBA when in use
- All stainless steel contact parts
- Mobile support frame
- Easy clean design, no crevices
- Sieve straight into tote bins, drums or bags

## TYPICAL MATERIALS

- Spices
- Cosmetics
- Seeds
- Most powders/ granular products
- Flour
- Crystal sugar
- Starch
- Cocoa
- Liquids

## PRODUCT OPTIONS

### Machine configurations*

- Continuous processing of 2 fractions - oversize/fines
- Continuous processing of 3 fractions - oversize/cut 1/ fines
- Outlet flexible connection sleeve
- Addition of underscreen magnet assy
- Mesh deblinding - mechanical
- Mesh deblinding - ultrasonic

***More options available on request**

### Finishes available

- Mirror polish to internal surfaces

**CERTIFIED TECHNOLOGY**

# Slimline Range

## SM 550-FF

### Vibratory Check Screener in 550mm Diameter

The 550-FF model can be used as a simple means of check sieving into bins or containers. It is primarily designed to be fed under gravity within new or existing production lines, to screen product into a static weigh bin, big bag, convey line or hopper.

The basic unit will locate within a confined area to provide for retrospective fitting into systems that previously had no sieving equipment. Used with the optional wheeled base assembly, it makes an ideal arrangement to sieve ingredients in small or large batch volumes.

**INDUSTRIES**

Food & Drink | Pharmaceutical | Chemical | Nutriceutical | Reclamation & Recycling | Additive Manufacturing

## FEATURES

- Mobile stands available for greater flexibility, which can be designed to suit installation
- Constructed from FDA compliant materials
- No tool, quick change screens
- Easy clean design, no crevices
- Dust & hose proof IP67
- Noise level less than 70 dBA when in use
- All stainless steel contact parts
- ATEX approved on all sizes as standard
- Can be fitted into sack tipping stations to provide for a dust free, clean operating area
- Vacuum / pressure transfer models available

## TYPICAL MATERIALS

- Spices
- Cosmetics
- Seeds
- Most powders / granular products
- Liquid separation
- Flour
- Crystal sugar
- Starch
- Cocoa
- Wet or dry applications

## PRODUCT OPTIONS

### Machine configurations*

- Open top version with reduced or extended height top gallery
- Sack tip entry with Safety grid
- Inlet diaphragm seal 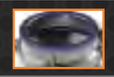
- Underscreen magnet assy
- 304SS tubular handles to clamps
- Upgrade to - Internal: ATEX 20 II 1D External: ATEX 22 II 3D
- Cone dispersion type inlet
- Weirflo type inlet 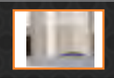
- Jacob, BFM and Triclamp inlet / outlet
- Oversize discharge outlet with weir plate
- Tubular 'C' type frame
- Ultrasonic upgrade
- Safety interlock

### Finishes available

- External mirror polish to top gallery <0.8Ra
- Dressing of all external welds (with standard mirror polish)
- Pharmaceutical mirror polish <0.25Ra & dressing of all external welds
- Passivation after polish
- Viwateq/Sublimotion finish - whole machine
- Upgrade from earth clips to external direct mesh earthing system

**CERTIFIED TECHNOLOGY**



*More options available on request



# Slimline Range

## SM 950-ST

### Vibratory Check Screener in 950mm Diameter

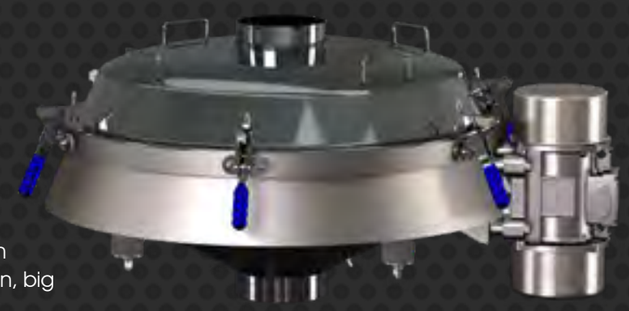

The 950-ST is primarily designed to be fed under gravity within new or existing production lines, to screen product into a static weigh bin, big bag, convey line or hopper.

The 'Slimline' can be located above the inlet to provide an efficient and fast means of ensuring product reliability. The basic unit will locate within a confined area to provide for retrospective fitting into systems that previously had no sieving equipment.

**INDUSTRIES**

Food & Drink | Pharmaceutical | Chemical | Nutriceutical | Reclamation & Recycling | Additive Manufacturing

## FEATURES

- Can be fitted into sack tipping stations to provide for a dust free, clean operating area
- Constructed from FDA compliant materials
- No tool, quick change screens
- Easy clean design, no crevices
- Vacuum / pressure transfer models available
- Noise level less than 70 dBA when in use
- All stainless steel contact parts
- ATEX approved on all sizes as standard
- Dust & hose proof IP67

## TYPICAL MATERIALS

- Spices
- Cosmetics
- Seeds
- Most powders/ granular products
- Liquid separation
- Flour
- Crystal sugar
- Starch
- Cocoa
- Wet or dry applications

## PRODUCT OPTIONS

### Machine configurations*

- Upgrade to - Internal: ATEX 20 II 1D External: ATEX 22 II 3D
- 304SS tubular handles to clamps
- Easy clean drawer magnet assy
- Cone dispersion type inlet
- Weirflo type inlet 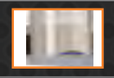
- Vision port 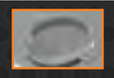
- Jacob, BFM and Triclamp inlet / outlet
- Oversize discharge outlet with weir plate
- Support frame assy
- Collection bin
- Ultrasonic upgrade
- Safety interlock

### Finishes available

- External mirror polish to top gallery < 0.8Ra
- Dressing of all external welds (with standard mirror polish)
- Pharmaceutical mirror polish <0.25Ra & dressing of all external welds
- Passivation after polish
- Viwateq/Sublimotion finish -whole machine
- Upgrade from earth clips to external direct mesh earthing system

**CERTIFIED TECHNOLOGY**

*More options available on request

sievmaster by farleygreene

# Slimline Range

## SM 1250-ST

### Vibratory Check Screener in 1250mm diameter

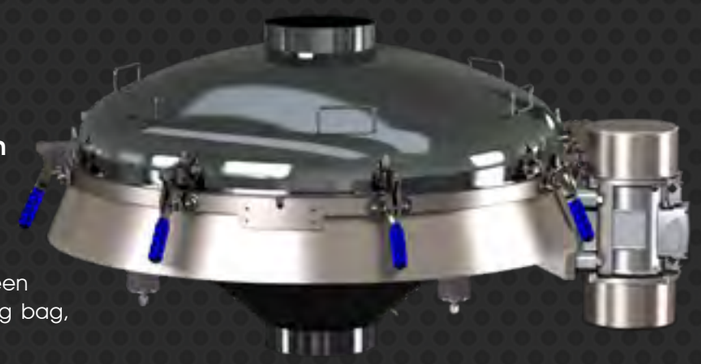

The 1250-ST is primarily designed to be fed under gravity within new or existing production lines, to screen product into a static weigh bin, big bag, convey line or hopper.

This larger unit is technically similar to the SM550/950 models but are designed for very high throughput requirements and have some small design changes due to the size and weight of the components. Maximum consideration is given in the design to ensure these large units can be stripped down by operators.

**INDUSTRIES**

Food & Drink | Pharmaceutical | Chemical | Nutriceutical | Reclamation & Recycling | Additive Manufacturing

## FEATURES

- Support frames available, which can be designed to suit installation
- Constructed from FDA compliant materials
- No tool, quick change screens
- Easy clean design, no crevices
- Dust & hose proof IP67
- Noise level less than 70 dBA when in use
- All stainless steel contact parts
- ATEX approved on all sizes as standard
- Vacuum / pressure transfer models available

## TYPICAL MATERIALS

- Spices
- Cosmetics
- Seeds
- Most powders/ granular products
- Liquid separation
- Flour
- Crystal sugar
- Starch
- Cocoa
- Wet or dry applications

## PRODUCT OPTIONS

### Machine configurations*

- Upgrade to - Internal: ATEX 20 II 1D External: ATEX 22 II 3D
- 304SS tubular handles to clamps
- Easy clean drawer magnet assy
- Cone dispersion type inlet
- Weirflo type inlet
- Vision port
- Jacob, BFM and Triclamp outlet end
- Jacob, BFM and Triclamp inlet end
- Oversize discharge outlet with weir plate
- Support frame assy
- Collection bin
- Ultrasonic upgrade
- Safety interlock

### Finishes available

- External mirror polish to top gallery < 0.8Ra
- Dressing of all external welds (with standard mirror polish)
- Pharmaceutical mirror polish <0.25Ra & dressing of all external welds
- Passivation after polish
- Viwatea/Sublimotion finish -whole machine
- Upgrade from earth clips to external direct mesh earthing system

**CERTIFIED TECHNOLOGY**

FDA CE Ex

*More options available on request





sievmaster by farleygreene

# Slimline Range

## SM 1550-ST

### Vibratory Check Screener in 1550mm Diameter

The 1550-ST is primarily designed to be fed under gravity within new or existing production lines, to screen product into a static weigh bin, big bag, convey line or hopper.

This larger unit is technically similar to the SM550/950 models but are designed for very high throughput requirements and have some small design changes due to the size and weight of the components. Maximum consideration is given in the design to ensure these large units can be stripped down by operators.

**INDUSTRIES**

Food & Drink | Pharmaceutical | Chemical | Nutriceutical | Reclamation & Recycling | Additive Manufacturing

## FEATURES

- Support frames available, which can be designed to suit installation
- Constructed from FDA compliant materials
- No tool, quick change screens
- Easy clean design, no crevices
- Noise level less than 70 dBA when in use
- All stainless steel contact parts
- ATEX approved on all sizes as standard
- Vacuum / pressure transfer models available

## TYPICAL MATERIALS

- Spices
- Cosmetics
- Seeds
- Most powders/ granular products
- Liquid separation
- Flour
- Crystal sugar
- Starch
- Cocoa
- Wet or dry applications

## PRODUCT OPTIONS

### Machine configurations*

- Upgrade to - Internal: ATEX 20 II 1D External: ATEX 22 II 3D
- 304SS tubular handles to clamps
- Easy clean drawer magnet assy
- Cone dispersion type inlet
- Weirflo type inlet
- Vision port
- Jacob, BFM and Triclamp outlet end
- Jacob, BFM and Triclamp inlet end
- Oversize discharge outlet with weir plate
- Support frame assy
- Collection bin
- Ultrasonic upgrade
- Safety interlock

### Finishes available

- External mirror polish to top gallery < 0.8Ra
- Dressing of all external welds (with standard mirror polish)
- Pharmaceutical mirror polish <0.25Ra & dressing of all external welds
- Passivation after polish
- Viwatea/Sublimotion finish - whole machine
- Upgrade from earth clips to external direct mesh earthing system

**CERTIFIED TECHNOLOGY**

FDA CE Ex

*More options available on request

# Slimline Range

## SM 550-VS

### Vibratory Check Screener for Pneumatic Conveying

Wherever loose powders are sieved, airborne dust being generated is nearly always a problem. It is unpleasant within the working environment, and more importantly hazardous to health. The SM 550-VS has been designed to overcome this issue and provide a means of transferring and sieving product from one area to another in a single operation.

**This model is vacuum only. Pressure transfer system available with larger models.**

**INDUSTRIES**

Food & Drink | Pharmaceutical | Chemical | Nutriceutical | Reclamation & Recycling | Additive Manufacturing

## FEATURES

- Enclosed system removing the issue of airborne dust
- ATEX approved on all sizes as standard
- Production sieving into conveyor, mixer or bagging machines
- Constructed from FDA compliant materials
- Dust & hose proof IP67
- Inlets/outlets sized to suit new or existing convey lines
- Mobile stands for greater flexibility
- No tool, quick change screens
- Easy clean design, no crevices
- Noise level less than 70 dBA when in use

## TYPICAL MATERIALS

- Spices
- Cosmetics
- Seeds
- Liquid separation
- Pharmaceutical powders
- Most powders/ granular products
- Flour
- Crystal sugar
- Starch
- Cocoa
- Wet or dry applications

## PRODUCT OPTIONS

### Machine configurations*

- Upgrade to - Internal: ATEX 20 II 1D External: ATEX 22 II 3D
- 304SS tubular handles to clamps
- Addition of underscreen magnet assy
- Price reduction option
- Inlet powder entry flow type
- Oversize outlet c/w connection to manual butterfly valve
- Oversize outlet c/w connection to pneumatically actuated butterfly valve
- Fluidisation to funnel cone
- Air bleed valve after outlet
- Ultrasonic upgrade
- Collection bin 35L
- Safety interlock

### Finishes available

- Dressing of all external welds (with mirror polish)
- Pharmaceutical mirror polish <0.25Ra & dressing of all external welds
- Passivation after polish
- Viwateq/Sublimotion finish -whole machine
- Upgrade from earth clips to external direct mesh earthing system

**CERTIFIED TECHNOLOGY**

***More options available on request**



PRODUCT SPECIFICATION

# Slimline Range

## SM 950-VS/PS

### Vibratory Check Screener for Pneumatic Conveying

Wherever loose powders are sieved, airborne dust being generated is nearly always a problem. It is unpleasant within the working environment, and more importantly hazardous to health. The SM 950-VS has been designed to overcome this issue and provide a means of transferring and sieving product from one area to another in a single operation.

**INDUSTRIES**

Food & Drink | Pharmaceutical | Chemical | Nutriceutical | Reclamation & Recycling | Additive Manufacturing

## FEATURES

- Enclosed system removing the issue of airborne dust
- ATEX approved on all sizes as standard
- Production sieving into conveyor, mixer or bagging machines
- Constructed from FDA compliant materials
- Dust & hose proof IP67
- Inlets/outlets sized to suit new or existing convey lines
- Mobile stands for greater flexibility
- No tool, quick change screens
- Easy clean design, no crevices
- Noise level less than 70 dBA when in use

## TYPICAL MATERIALS

- Spices
- Cosmetics
- Seeds
- Liquid separation
- Pharmaceutical powders
- Most powders/ granular products
- Flour
- Crystal sugar
- Starch
- Cocoa
- Wet or dry applications

## PRODUCT OPTIONS

### Machine configurations*

- Upgrade to - Internal: ATEX 20 II 1D External: ATEX 22 II 3D
- 304SS tubular handles to clamps
- Inlet powder entry flow type
- Safety interlock
- Fluidisation to funnel cone
- Oversize outlet c/w connection to manual butterfly valve
- Oversize outlet c/w connection to pneumatically actuated butterfly valve
- Air bleed valve after outlet
- Ultrasonic upgrade
- Collection bin

### Finishes available

- Dressing of all external welds (with mirror polish)
- Pharmaceutical mirror polish <0.25Ra & dressing of all external welds
- Passivation after polish
- Viwateq/Sublimotion finish -whole machine
- Upgrade from earth clips to external direct mesh earthing system

**CERTIFIED TECHNOLOGY**

***More options available on request**

# Slimline Range

## SM 1250-VS/PS

### Vibratory Check Screener for Pneumatic Conveying

Wherever loose powders are sieved, airborne dust being generated is nearly always a problem. It is unpleasant within the working environment, and more importantly hazardous to health. The SM 1250-VS has been designed to overcome this issue and provide a means of transferring and sieving product from one area to another in a single operation.

**Vacuum and pressure model shown opposite.**

**INDUSTRIES**

Food & Drink | Pharmaceutical | Chemical | Nutriceutical | Reclamation & Recycling | Additive Manufacturing

## FEATURES

- Enclosed system removing the issue of airborne dust
- ATEX approved on all sizes as standard
- Production sieving into conveyor, mixer or bagging machines
- Constructed from FDA compliant materials
- Dust & hose proof IP67
- Inlets/outlets sized to suit new or existing convey lines
- Mobile stands for greater flexibility
- No tool, quick change screens
- Easy clean design, no crevices
- Noise level less than 70 dBA when in use

## TYPICAL MATERIALS

- Spices
- Cosmetics
- Seeds
- Liquid separation
- Pharmaceutical powders
- Most powders/ granular products
- Flour
- Crystal sugar
- Starch
- Cocoa
- Wet or dry applications

## PRODUCT OPTIONS

### Machine configurations*

- Upgrade to - Internal: ATEX 20 II 1D External: ATEX 22 II 3D
- 304SS tubular handles to clamps
- Inlet powder entry flow type
- Safety interlock
- Fluidisation to funnel cones
- x2 vision ports as standard
- Oversize outlet c/w connection to manual butterfly valve
- Oversize outlet c/w connection to pneumatically actuated butterfly valve
- Air bleed valve after outlet
- Ultrasonic upgrade
- Collection bin

### Finishes available

- Dressing of all external welds (with mirror polish)
- Pharmaceutical mirror polish <0.25Ra & dressing of all external welds
- Passivation after polish
- Viwatea/Sublimotion finish -whole machine
- Upgrade from earth clips to external direct mesh earthing system

**CERTIFIED TECHNOLOGY**

FDA CE Ex

 ***More options available on request**



# Slimline Easilift Range

## SM 550-ESL

### Sack Tipping Check Screener

The Sievmaster Easilift sack tipping station has been designed with a Pneumatically assisted hood for easy access to the sieve without heavy lifting. Used together with the Slimline vibratory check screener, this machine features an inclined sack rest table for low level bag tipping.

Standard 25kg bags of product can be dispensed directly in to the sieve for check screening into containers, static weigh bins, convey systems or mixers.

**INDUSTRIES**

Food & Drink | Pharmaceutical | Chemical | Nutriceutical | Reclamation & Recycling | Additive Manufacturing

## FEATURES

- Connection to vacuum transfer systems or any other convey equipment
- Pneumatically assisted hood - no heavy lifting or awkward sleeve connections
- Standard 900mm ergonomic sack tipping height
- Low care to High care transfer systems available
- Integrated dust extraction and filtration units
- Inlet enclosure doors
- No tool, quick change screens
- Easy clean design, no crevices
- Dust & hose proof IP67
- Noise level less than 70 dBA when in use

## TYPICAL MATERIALS

- Spices
- Cosmetics
- Seeds
- Liquid separation
- Pharmaceutical powders
- Most powders/ granular products
- Flour
- Crystal sugar
- Starch
- Cocoa
- Wet or dry applications

## PRODUCT OPTIONS

### Machine configurations*

- Removal of front door
- Connection to vacuum transfer system
- Addition of underscreen magnet assy
- 304SS tubular handles to clamps
- Safety interlock on sieve & dusthood
- Fluidisation to funnel cone
- Dusthood assy in 316SS
- Support frame in 316SS
- Dust supression cover
- Local dust extraction - Electric / vacuum
- Step with platform
- Ultrasonic upgrade

### Finishes available

- Dressing of all external welds
- Pharmaceutical mirror polish <0.25Ra & dressing of all external welds
- Passivation after polish
- WIP / CIP cleaning to dusthood and sieve
- Upgrade from earth clips to external direct mesh earthing system

**CERTIFIED TECHNOLOGY**

FDA CE Ex

***More options available on request**

sievmaster by farleygreene

# Slimline Easilift Range
# SM 950-ESL

## Sack Tipping Check Screener for Large Volume Requirements

The Sievmaster Easilift sack tipping station has been designed with a Pneumatically assisted hood for easy access to the sieve without heavy lifting. Used together with the Slimline vibratory check screener, this machine features an inclined sack rest table for low level bag tipping.

Standard 25kg bags of product can be dispensed directly in to the sieve for check screening into containers, static weigh bins, convey systems or mixers.

**INDUSTRIES**

Food & Drink | Pharmaceutical | Chemical | Nutriceutical | Reclamation & Recycling | Additive Manufacturing

## FEATURES

- Connection to vacuum transfer systems or any other convey equipment
- Pneumatically assisted hood - no heavy lifting or awkward sleeve connections
- Low care to High care transfer systems available
- Standard 900mm ergonomic sack tipping height
- Integrated dust extraction and filtration units
- Inlet enclosure doors
- No tool, quick change screens
- Easy clean design, no crevices
- Dust & hose proof IP67
- Noise level less than 70 dBA when in use

## TYPICAL MATERIALS

- Spices
- Cosmetics
- Seeds
- Liquid separation
- Pharmaceutical powders
- Most powders/ granular products
- Flour
- Crystal sugar
- Starch
- Cocoa
- Wet or dry applications

## PRODUCT OPTIONS

### Machine configurations*

- Removal of front door
- Connection to vacuum transfer system
- Easy clean drawer magnet assy
- 304SS tubular handles to clamps
- Safety interlock on sieve & dusthood
- Fluidisation to funnel cone 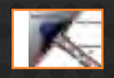
- Dusthood assy in 316SS
- Support frame in 316SS
- Dust supression cover
- Local dust extraction - Electric / vacuum 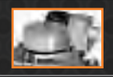
- Step with platform
- Ultrasonic upgrade

### Finishes available

- Dressing of all external welds
- Pharmaceutical mirror polish <0.25Ra & dressing of all external welds
- Passivation after polish
- WIP / CIP cleaning to dusthood and sieve
- Upgrade from earth clips to external direct mesh earthing system

**CERTIFIED TECHNOLOGY**

FDA CE Ex

 ***More options available on request**





sievmaster by farleygreene

# Slimline Easilift Range
# SM 550-ESL-ULTRA

## Ultra Hygienic Sack Tipping Check Screener

The Sievmaster Easilift Ultra sack tip station has been designed primarily for the food industry where hygiene is of prime importance. Similar to the standard Easilift, the Ultra version also features a pneumatically assisted dust hood but is completely crevice free. A fold out sack table ensures a hygiene barrier between sanitary and non-sanitary environments, and a side mount motor improves user access. Used in combination with the Slimline check screener, this machine can process up to 25kg worth of powder at once, dispensing into containers, static weigh bins or incorporated into convey systems.

**INDUSTRIES**

Food & Drink | Pharmaceutical | Chemical | Nutriceutical | Reclamation & Recycling | Additive Manufacturing

## FEATURES

- Reduced frame area for greater outlet access
- Integrated dust extration ready
- Pneumatically assisted hood – no heavy lifting or awkward sleeve connections
- Quick release door catch and interlock switch ready
- Constructed from FDA compliant materials
- Inlet door seal for dust suppression and wet in place
- No tool, quick change screens
- Dust & hose proof IP67
- Crevice free for easy cleaning

## TYPICAL MATERIALS

- Spices
- Cosmetics
- Seeds
- Liquid separation
- Pharmaceutical powders
- Most powders/ granular products
- Flour
- Crystal sugar
- Starch
- Cocoa
- Wet or dry applications

## PRODUCT OPTIONS

### Machine configurations*

- Removal of front door
- Connection to vacuum transfer system
- Addition of underscreen magnet assy
- 304SS tubular handles to clamps
- Safety interlock
- Fluidisation to funnel cone 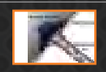
- Dusthood assy in 316SS
- Support frame in 316SS
- Dust supression cover
- Local dust extraction - Electric / vacuum
- Step with platform
- Ultrasonic upgrade

### Finishes available

- Dressing of all external welds
- Pharma mirror polish < 0.25Ra & dressing of all external welds
- Passivation after polish
- WIP / CIP cleaning to dusthood and sieve
- Upgrade from earth clips to external direct mesh earthing system

**CERTIFIED TECHNOLOGY**

FDA CE Ex

*More options available on request

sievmaster by farleygreene

# Slimline Multiscreen Range

## SM 800

### Vibratory Sieve for Grading and Separating

Separate, grade, and sort nearly all types of materials into different sizes, using the Multiscreen vibratory sieve. Its weight configuration technology controls the amount of time product is sat on mesh screens, and the deblinding system eliminates clogging for a consistent throughput and mesh longevity. The Multiscreen can be used in all types of industries and environments and features a quick change mesh system that allows for easy mesh changes and cleaning.

**800mm diameter screen for medium throughput applications.**

**INDUSTRIES**

Food & Drink | Pharmaceutical | Chemical | Nutriceutical | Reclamation & Recycling | Additive Manufacturing

## FEATURES

- Specially designed frames and extended height bases
- Scroll system for maximum screening efficiency
- Separation of milled or ground products in up to 4 grades in one pass
- Screening of fine powders (e.g. toner powder, metal powders)
- Grading of kibbled or "disintegrated" products
- Constructed from FDA compliant materials
- Quick change bonded screens
- Easy clean design, no crevices
- Quality assured graded end product
- Noise level less than 70 dBA when in use

## TYPICAL MATERIALS

- Spices
- Cosmetics
- Seeds
- Liquid separation
- Pharmaceutical powders
- Most powders/ granular products
- Flour
- Crystal sugar
- Starch
- Cocoa
- Wet or dry applications

## PRODUCT OPTIONS

### Machine configurations*

- Continuous processing of 2 fractions - oversize/fines
- Continuous processing of 3 fractions - oversize/cut 1/fines
- Continuous processing of 4 fractions - oversize/cut 1/ cut 2 / fines
- ATEX upgrade
- Enclosed top cover
- Vision port
- Intermediate deck dwell control quarter scroll
- Dwell control full scroll
- Mesh deblinding - mechanical
- Mesh deblinding - ultrasonic
- Mobile base assy
- Hygiene base assy
- Hygiene vibro body & suspension

### Finishes available

- Internal mirror polish to galleries (standard < 0.8Ra)
- Dressing of all internal / external welds
- Pharmaceutical mirror polish <0.25Ra & dressing of all external welds
- Passivation after polish
- Viwateq/Sublimotion finish -whole machine
- Upgrade from earth clips to external direct mesh earthing system

**CERTIFIED TECHNOLOGY**

 ***More options available on request**



sievmaster by farleygreene

# Slimline Multiscreen Range

## SM 1200

### Vibratory Sieve for Grading and Separating

Separate, grade, and sort nearly all types of materials into different sizes, using the Multiscreen vibratory sieve. Its weight configuration technology controls the amount of time product is sat on mesh screens, and the deblinding system eliminates clogging for a consistent throughput and mesh longevity. The Multiscreen can be used in all types of industries and environments and features a quick change mesh system that allows for easy mesh changes and cleaning.

**1200mm diameter screen for high throughput applications.**

**INDUSTRIES**

Food & Drink | Pharmaceutical | Chemical | Nutriceutical | Reclamation & Recycling | Additive Manufacturing

## FEATURES

- Specially designed frames and extended height bases
- Scroll system for maximum screening efficiency
- Separation of milled or ground products in up to 4 grades in one pass
- Screening of fine powders (e.g. toner powder, metal powders)
- Grading of kibbled or "disintegrated" products
- Constructed from FDA compliant materials
- Quick change bonded screens
- Easy clean design, no crevices
- Quality assured graded end product
- Noise level less than 70 dBA when in use

## TYPICAL MATERIALS

- Spices
- Cosmetics
- Seeds
- Liquid separation
- Pharmaceutical powders
- Most powders/ granular products
- Flour
- Crystal sugar
- Starch
- Cocoa
- Wet or dry applications

## PRODUCT OPTIONS

### Machine configurations*

- Continuous processing of 2 fractions - oversize / fines
- Continuous processing of 3 fractions - oversize / cut 1 /fines
- Continuous processing of 4 fractions - oversize /cut 1/ cut 2 / fines
- ATEX upgrade
- Enclosed top cover
- Vision port
- Intermediate deck dwell control quarter scroll
- Dwell control full scroll
- Mesh deblinding - mechanical
- Mesh deblinding - ultrasonic
- Mobile base assy
- Hygiene base assy
- Hygiene vibro body & suspension

### Finishes available

- Internal mirror polish to galleries (standard < 0.8Ra)
- Dressing of all internal / external welds
- Pharmaceutical mirror polish <0.25Ra & dressing of all external welds
- Passivation after polish
- Viwateq / Sublimotion finish -whole machine
- Upgrade from earth clips to external direct mesh earthing system

**CERTIFIED TECHNOLOGY**

***More options available on request**

sievmaster by farleygreene

# Slimline Multiscreen Range

## SM 1500

### Vibratory Sieve for Grading and Separating

Separate, grade, and sort nearly all types of materials into different sizes, using the Multiscreen vibratory sieve. Its weight configuration technology controls the amount of time product is sat on mesh screens, and the deblinding system eliminates clogging for a consistent throughput and mesh longevity. The Multiscreen can be used in all types of industries and environments and features a quick change mesh system that allows for easy mesh changes and cleaning.

**1500mm diameter screen for very high throughput applications.**

**INDUSTRIES**

Food & Drink | Pharmaceutical | Chemical | Nutriceutical | Reclamation & Recycling | Additive Manufacturing

## FEATURES

- Specially designed frames and extended height bases
- Scroll system for maximum screening efficiency
- Separation of milled or ground products in up to 4 grades in one pass
- Screening of fine powders (e.g. toner powder, metal powders)
- Grading of kibbled or "disintegrated" products
- Constructed from FDA compliant materials
- Quick change bonded screens
- Easy clean design, no crevices
- Quality assured graded end product
- Noise level less than 70 dBA when in use

## TYPICAL MATERIALS

- Spices
- Cosmetics
- Seeds
- Liquid separation
- Pharmaceutical powders
- Most powders/ granular products
- Flour
- Crystal sugar
- Starch
- Cocoa
- Wet or dry applications

## PRODUCT OPTIONS

### Machine configurations*

- Continuous processing of 2 fractions - oversize / fines 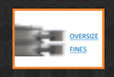

- Continuous processing of 3 fractions - oversize / cut 1/fines 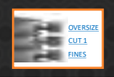

- Continuous processing of 4 fractions - oversize/cut 1/cut 2 / fines 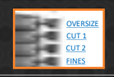

- ATEX upgrade

- Enclosed top cover
- Vision port
- Intermediate deck dwell control quarter scroll 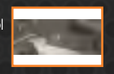
- Dwell control full scroll
- Mesh deblinding - mechanical 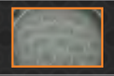
- Mesh deblinding - ultrasonic
- Hygiene base assy
- Hygiene vibro body & suspension

*More options available on request

### Finishes available

- Internal mirror polish to galleries (standard < 0.8Ra)
- Dressing of all internal/external welds
- Pharmaceutical mirror polish <0.25Ra & dressing of all external welds
- Passivation after polish
- Viwateq/Sublimotion finish -whole machine
- Upgrade from earth clips to external direct mesh earthing system

**CERTIFIED TECHNOLOGY**





sievmaster by farleygreene

# SM 700-ST

### Heavy Duty Vibratory Sieve for Check Screening & Grading

The Sievmaster 700-ST uses powerful vibration to separate material on a continuous basis, and quick-change mesh screens mean minimum interruption between batches. The smooth, clean design means there are no exposed rotating parts, and a fully sealed drive system means it can be used in the most arduous environments. Ideal for areas where maximum usage is required and where high pressure hosing down might be normal. Fast, efficient sieving contained within a robust unit.

**INDUSTRIES**

Food & Drink | Pharmaceutical | Chemical | Nutriceutical | Reclamation & Recycling | Additive Manufacturing

## FEATURES

- Scroll system for maximum screening efficiency
- High speed version for fine powders
- Check sieving and grading under FIBC/IBC blender discharging systems
- Product sieving into sacks or containers
- Separates oversize from fine material continuously
- Constructed from FDA compliant materials
- No tool, quick change screens
- Easy clean design, no crevices
- Dust & hose proof IP67
- Noise level less than 70 dBA when in use

## TYPICAL MATERIALS

- Spices
- Cosmetics
- Seeds
- Liquid separation
- Pharmaceutical powders
- Most powders/ granular products
- Flour
- Crystal sugar
- Starch
- Cocoa
- Wet or dry applications

## PRODUCT OPTIONS

### Machine configurations*

- ATEX upgrade

- Reduced height top gallery
- Extended height top gallery
- Enclosed top cover
- Addition of underscreen magnet assy
- 304SS tubular handles to clamps
- Dwell control quarter scroll 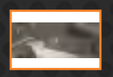
- Dwell control full scroll
- Vision port 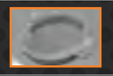
- Mesh deblinding - ultrasonic
- Safety interlock
- High speed motor


*More options available on request

### Finishes available

- Dressing of all internal/external welds (with standard mirror polish)
- Pharmaceutical mirror polish <0.25Ra & dressing of all external welds
- Passivation after polish
- Viwateq/Sublimotion finish
- Upgrade from earth clips to external direct mesh earthing system

**CERTIFIED TECHNOLOGY**

# Segregator Range

## SM 42 & 53

### Linear Vibratory Screener

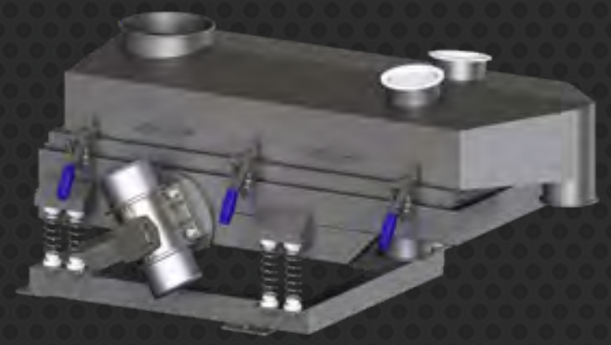

The Sievmaster Segregator has a large screen area designed to move wet or dry product in a linear motion. It is ideally suited to light fragile products with low bulk densities.
A 'Hygiene' series is also available, developed especially for the food industry and manufactured entirely from stainless steel. These easy clean units can be supplied upon wheels for mobility or feet for static installations. The range is available with variations to provide up to 3 separations, with a wide choice of sieving aids for problem materials. Each unit is made to order to the customers exact process needs.

**INDUSTRIES**

Food & Drink | Pharmaceutical | Chemical | Nutriceutical | Reclamation & Recycling | Additive Manufacturing

## FEATURES

- Available in 1250 mm long x 650 mm wide and 1550 mm long x 920 mm wide mesh frame sizes
- Easy clean design, no crevices
- Dust & hose proof
- Constructed from FDA compliant materials
- Quick change bonded screens
- Low maintenance/running costs
- Noise level less than 70 dBA in use
- Your product quality maintained
- Sieve and convey in one action
- Full validation packages for food/pharma

## TYPICAL MATERIALS

- Wet or dry applications
- De-dusting & de-watering
- Liquid separation
- Almost any powder or ganulated material
- Biscuits
- Confectionary
- Seeds
- Liquid separation
- Tablets & capsules

## PRODUCT OPTIONS

### Machine configurations*

- ATEX upgrade
- FDA/EC upgrade
- Ultrasonic upgrade
- Mesh deblinding - mechanical
- Jacob or BFM inlet/ outlet/oversize
- Other made to order options available

*More options available on request

### Finishes available

- Mirror polish to internal surfaces
- Other finishes available depending on application requirements

**CERTIFIED TECHNOLOGY**





# Rota Range

## SM R200-ST & R200-ST-LB

### Centrifugal Check Sifter with Fixed Drive Shaft Supported at Both Ends

The Rota 200-ST is the mainstay of and introductory model to the Sievmaster Rota Series. The drive shaft is supported by bearings at both ends, one of which is removed with the end door assembly to change the meshes and for cleaning. The Rota 200-ST-LB is nearly identical to the Rota 200-ST but comes with the addition of a larger sized inlet, extending the auger by 250mm and changing the auger flight to a toothed profile. The purpose of this is to improve the ability of the auger to handle product that's more difficult to break down.

**INDUSTRIES**

Food & Drink | Pharmaceutical | Chemical | Nutriceutical | Reclamation & Recycling | Additive Manufacturing

## FEATURES

- Inlets and outlets are designed with standardised flanges but can be supplied with adaptors to suit any connection
- All motors and electrical items are IP55 rated, machine can be washed down without fear of ingress
- All doors and access points are fitted with magnetic interlock swtiches
- Dust tight design, non-vibratory
- Low maintenance/running costs
- Quick change screens with an easy clean design
- Constructed from FDA compliant materials and without crevices
- Pneumatic conveying system integration

## TYPICAL MATERIALS

- Spices
- Cosmetics
- Seeds
- Liquid separation
- Most non-friable powders/granular products
- Flour
- Crystal sugar
- Starch
- Cocoa
- Agrochemicals/ fertiliser

## PRODUCT OPTIONS

### Machine configurations*

- ATEX upgrade
- Wedgewire mesh basket
- Bonded mesh basket
- Inlet transition piece
- Fines transition piece
- Oversize transition piece
- Easy clean magnet assy to fines
- Support frame static or mobile
- Oversize collection barrel
- Fill level alarm
- Oversize outlet control

*More options available on request

### Finishes available

- Mirror polish to internal stainless parts (standard < 0.8Ra)
- Dressing of all internal/external welds - all stainless parts
- Pharma mirror polish < 0.25Ra & dressing of all internal/external welds - all stainless parts
- Passivation after polish to all stainless parts
- Viwatea/Sublimotion finish to all stainless parts
- Electropolish to all stainless parts

**CERTIFIED TECHNOLOGY**

# Rota Range

## SM R200-C

### Centrifugal Check Sifter with Cantilever Drive Shaft Support at Drive End

The Rota 200-C does not have a bearing at each end of the auger drive shaft, but instead has a cantilevered auger and paddle assembly. This makes it significantly quicker and easier to remove the mesh basket and auger paddle assemblies for cleaning. It also allows the oversize weir plate to be completely closed off ensuring all product will pass through the mesh.

**INDUSTRIES**

Food & Drink | Pharmaceutical | Chemical | Nutriceutical | Reclamation & Recycling | Additive Manufacturing

## FEATURES

- Inlets and outlets are designed with standardised flanges but can be supplied with adaptors to suit any connection
- All motors and electrical items are IP55 rated, machine can be washed down without fear of ingress
- All doors and access points are fitted with magnetic interlock swtiches
- Pneumatic conveying system integration
- Dust tight design, non-vibratory
- Low maintenance/running costs
- Quick change screens with an easy clean design
- Ø184mm inlet, a Ø200mm fines outlet and a Ø100mm oversize outlet
- Constructed from FDA compliant materials and without crevices

## TYPICAL MATERIALS

- Spices
- Cosmetics
- Seeds
- Liquid separation
- Most non-friable powders/granular products
- Flour
- Crystal sugar
- Starch
- Cocoa
- Agrochemicals/ fertiliser

## PRODUCT OPTIONS

### Machine configurations*

- ATEX upgrade 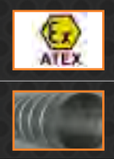
- Wedgewire mesh basket 
- Bonded mesh basket
- Inlet transition piece 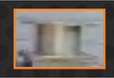
- Easy clean magnet assy to fines
- Support frame static or mobile
- Oversize collection barrel 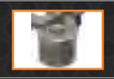
- Fill level alarm
- Oversize outlet control 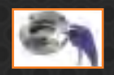

*More options available on request

### Finishes available

- Mirror polish to internal stainless parts (standard < 0.8Ra)
- Dressing of all internal/external welds - all stainless parts
- Pharma mirror polish < 0.25Ra & dressing of all internal/external welds - all stainless parts
- Passivation after polish to all stainless parts
- Viwateq/Sublimotion finish to all stainless parts
- Electropolish to all stainless parts

**CERTIFIED TECHNOLOGY**





# Rota Range

## SM R200-Disintegrader

### Centrifugal Lump Breaker with Fixed Drive Shaft Supported at Both Ends

The Rota Disintegrader also shares a significant number of its characteristics with the R200-ST. Whereas the R200-ST-LB improves on the deagglomeration capability of the R200-ST, the R200-DIST is a dedicated lump breaker. The inlet is replaced with a large wide-throated hopper, designed to be filled with product whilst the auger is inactive. After the unit has been loaded in "safe mode" the processing of the material will begin with no risk to the operator.

**INDUSTRIES**

Food & Drink | Pharmaceutical | Chemical | Nutriceutical | Reclamation & Recycling | Additive Manufacturing

## FEATURES

- Outlets are designed with standardised flanges but can be supplied with adaptors to suit any connection
- All motors and electrical items are IP55 rated, machine can be washed down without fear of ingress
- All doors and access points are fitted with magnetic interlock swtiches
- 100L hopper volume with 900mm ergonomic sack tip height and hinged, self-lifting top lid to cover
- Automatic start up on lid closure
- Fines outlet measures 412mm x 600 mm, oversize outlet measures 412mm x 149 mm
- Pneumatic conveying system integration
- Fitted with sack rest table
- Dust tight design, non-vibratory
- Low maintenance/running costs
- Mobile support frame

## TYPICAL MATERIALS

- Compacted dried fruits
- Biscuits for cheese cake bases
- Powder compacted by storage or conveying
- Agglomerated powders
- Fudge blocks
- Meringue
- Honeycomb

## PRODUCT OPTIONS

### Machine configurations*

- Deagglomeration of product (lump breaking) 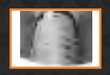
- ATEX upgrade
- Wedgewire mesh basket
- Bonded mesh basket
- Sacktip type infeed 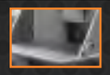
- Fines transition piece
- Oversize transition piece
- Oversize collection barrel 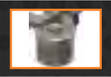
- Fill level alarm
- Oversize outlet control 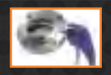

*More options available on request

### Finishes available

- Mirror polish to internal stainless parts (standard < 0.8Ra)
- Dressing of all internal/external welds - all stainless parts
- Pharmaceutical mirror polish <0.25Ra & dressing of all external welds
- Passivation after polish to all stainless parts
- Viwateq/Sublimotion finish to all stainless parts
- Electropolish to all stainless parts

**CERTIFIED TECHNOLOGY**

# Rota Range

## SM R350-ST & R350-ST-LB

### Centrifugal Check Sifter with Fixed Drive Shaft Supported at Both Ends

The R350-ST is the large capacity model of the Sievmaster Rota Series. The mesh baskets have a larger diameter and are slightly longer than those used on the R200 sieves. The auger also moves a much larger volume of product per revolution due to the increase in diameter. The R350-ST-LB comes with the addition of a larger sized inlet measuring 430 x 880mm, extending the auger by 450mm. The purpose of this is to improve the ability of the auger to handle product that's more difficult to break down.

**INDUSTRIES**

- Food & Drink
- Pharmaceutical
- Chemical
- Nutriceutical
- Reclamation & Recycling
- Additive Manufacturing

## FEATURES

- Inlets and outlets are designed with standardised flanges but can be supplied with adaptors to suit any connection
- All motors and electrical items are IP55 rated, machine can be washed down without fear of ingress
- All doors and access points are fitted with magnetic interlock swtiches
- Pneumatic conveying system integration
- Dust tight design, non-vibratory
- Low maintenance/running costs
- Quick change screens with an easy clean design
- Constructed from FDA compliant materials and without crevices

## TYPICAL MATERIALS

- Spices
- Cosmetics
- Seeds
- Liquid separation
- Most non-friable powders/granular products
- Flour
- Crystal sugar
- Starch
- Cocoa
- Agrochemicals/ fertiliser

## PRODUCT OPTIONS

### Machine configurations*

- Deagglomeration of product (lump breaking) 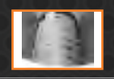
- ATEX upgrade
- Wedgewire mesh basket
- Inlet transition piece 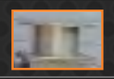
- Fines transition piece
- Oversize transition piece
- Easy clean magnet assy to fines
- Support frame - static/mobile
- Oversize collection barrel 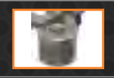
- Fill level alarm
- Oversize outlet control 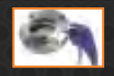

*More options available on request

### Finishes available

- Mirror polish to internal stainless parts (standard < 0.8Ra)
- Dressing of all internal/external welds - all stainless parts
- Pharma mirror polish < 0.25Ra & dressing of all internal/external welds - all stainless parts
- Passivation after polish to all stainless parts
- Viwateq/Sublimotion finish to all stainless parts
- Electropolish to all stainless parts

**CERTIFIED TECHNOLOGY**

# Sievmaster Ultrasonic Systems

The integration of Ultrasonic technology into Farleygreene's sieving units has proved to be nothing short of a miraculous solution to not only eliminate mesh de-blinding and blocking, but also to accelerate throughputs by a massive 300% in some cases.

The next generation version goes above and beyond the abilities of its predecessor by applying a continuously varying wave, known as 'frequency variation', to the mesh screen. This solves common problems that the 'single wave' resonance frequency systems of the past suffered from; including heating and 'hot spots' that ran the risk of causing premature mesh failure, as well as the individual tuning of each screen in order to work correctly. The Sievmaster ultrasonic system finds its own frequency and uniformly washes over the entire screen in a smooth and consistent wave pattern; thus reducing the need for wasteful re-meshing. The converter probe is conveniently situated outside the internal sieving area, to escape material caking as well as making the mesh frame much easier to clean. Just a single control box can run 2 screens from one generator box, representing a huge cost saving from other systems on the market, which require the inconvenience of devoting a generator for de-blinding each mesh.

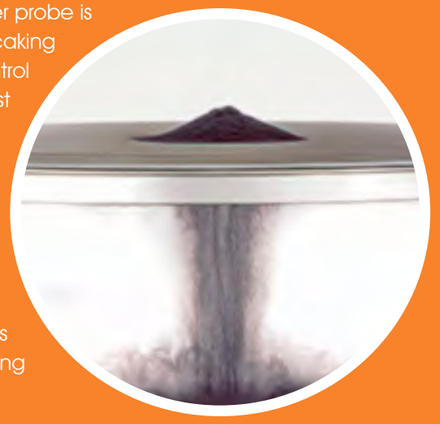

When used with the optional software suite the sonic pulse can be infinitely adjusted to suit the product that is being processed. This software also offers the unique function of up to 6 installed programs for different powders, the program can be pre-set by Farleygreene after testing and can also be saved as a file for you to install remotely. Each program can have 2 pulse variations allowing a sieving mode for a set time followed by a short powerful cleaning mode if required.

Farleygreene can fit the system to all machines from the 'Sievmaster' range of screening equipment, as well as a simple retro fit onto other manufacturer's existing ultrasonic mesh frames. Test units are readily available for demonstration at our facility, or on site trials can also be arranged.





## Why ultrasonic screening?

> Delivers efficient sifting of powders with particle sizes of <300 micron
> Improves through put up to 300% in some cases
> Helps to break down agglomerated materials
> Ensures a long term cleaning/deblinding effect
> Special attachment for use with laboratory test sieves
> Software package to allow remote control & analysing

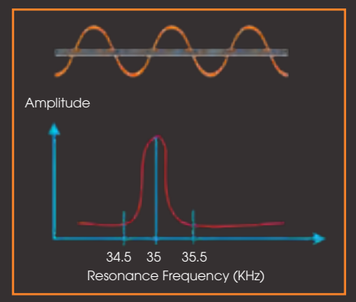


## How do ultrasonic screens work?

The generator creates a high frequency signal that the converter changes into an ultrasonic sound wave.

These oscillations are transferred to the mesh screen where they are evenly distributed. The oscillations of the mesh cloth reduce the frictional resistance between the powders and the screen. This reduces the tendency towards blocking and blinding, whilst fluidising the product as it flows across the mesh, resulting in increased throughputs.

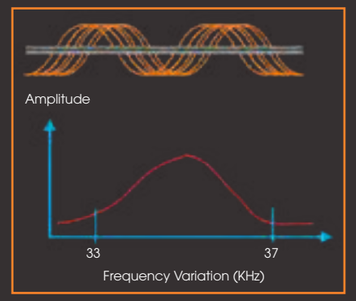

# Aftersales Support

During the life of your Sievmaster machine Farleygreene is here to support you. We provide a fully itemised spares list with exploded numbered drawings for you, bespoke to your machine, once it has been installed, allowing you easy identification of parts when required. We offer parts for a wide range equipment; not only for our own manufactured machinery. We can offer the following:

> Meshing of new and existing frames and rings, including bespoke items
> Mesh rolls and panels including woven mesh, perforated, wedge wire and synthetic mesh assemblies
> Replacement vibratory motors
> Flexible sleeves & rubber balls
> Bespoke fabrications

# Magnetic assemblies

We can now supply almost any type of magnet you require for your process line. From simple single magnet bars to geared rotating magnet arrays within an enclosed box, suitable for use with powders or liquids.

Our magnets are made from rare earth neodymium and are very stable, giving a very long magnetic life. The magnets can be supplied in a range of strengths, from 7,000 to 11,000 gauss. We can also provide gauss meters to ensure your QA protocols are met time after time.

Some magnets are fitted within the machine itself, but for larger units these are normally setup with external drawer type separators. Our sieving machines can be fitted with rare earth magnetic separators, mainly to stop any ferrous metal entering into production lines post screening.





# Process systems & equipment

We have forged relationships with many other process equipment manufacturers, and we can integrate a wide range of items with our sieving machinery. Some of these include:

> Big bag stations – loading and filling
> Vacuum and pressure conveyors
> Mechanical conveyors (flexible, screw, aero types)
> Weigh platforms
> Feeders

We can bring all these items together to provide a bespoke system to your application requirements, from design right through to installation.

Check sieving within a fully automated line with vacuum feed to sieve and filling into hopper with load cells. Hopper outlet with diverter valve to allow simple bin changeover.

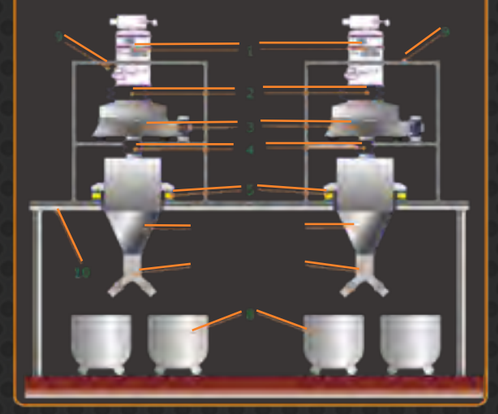

Check sieving from containers or sacks through hygiene break with pneumatic transfer & filling into tote bin or mixing bowl.

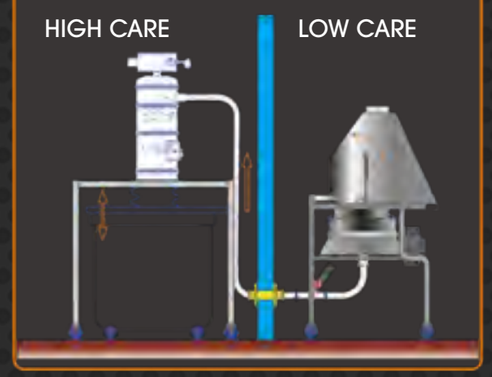


Check sieving using manual feed of small ingredients and feed of bulk ingredients from hopper or FIBC into rear of dusthood assembly.

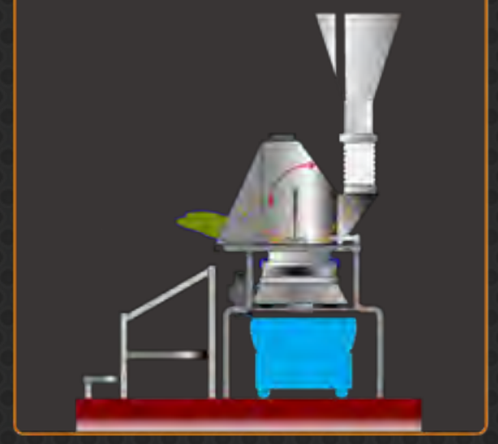

Ultrasonic fine powder grading with mechanical transfer & lifting system for filling small containers

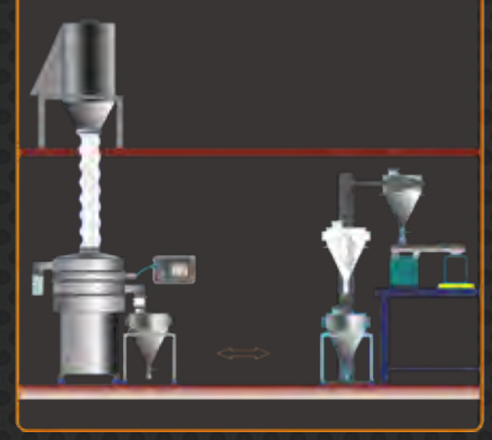

# Choice of mesh

## A general guide to our selection

Mesh selection is one of the most important choices when deciding on the sieving machine requirement. Throughput expectations, machine size and style of sieving are controlled by mesh size selection. Influencing factors are given below to aid customers in the choice of mesh for their application.

We provide a full remesh and meshing service for existing rings or frames in either stainless steel 304/316/318LN or 430CS for magnetic detection.

We can remesh to a wide range of standards such as EC1935/2004 & FDA – no matter who the original supplier or manufacturer.

### Stainless Steel Mesh

The most common material choice. It provides strength and is resistant to heat. It is ideal where a hot material is to be sieved or where a large amount of product will remain on the screen. It can be supplied in a variety of weave patterns, the most common being a plain grid type weave stainless steel mesh retains its size integrity even on larger meshes.

### Magnetic Mesh

Woven mesh can also be supplied in a special 430CS magnetic stainless version, this mesh has a higher chrome content than standard stainless steel mesh. Whilst still corrosion resistant, it can be picked up easily by rare earth magnet assemblies should any breakages occur in use. Another variant is 318LN mesh which is an austenitic-ferritic steel and is highly corrosion resistant but retains its magnetic properties. This type of mesh is available in a very limited range of apertures.

### Nylon & Polyester Mesh

Nylon meshes have a smoother filament than stainless steel and are ideal for sieving fine powders. Nylon has inherent abrasion resistance. They are limited to temperatures up to 60°C and will absorb moisture to create a slack and less efficient screen. It can also be coloured RED or BLUE. Polyester is similar to nylon, but superior in that it has a temperature endurance up to 130° C. It is, however, less resistant to abrasion than nylon.

### Phosphor Bronze

Often used where explosive materials are sieved, however stainless steel meshes have surpassed phosphor bronze due to availability.

### Perforated Mesh

This mesh is made from sheets punched to either square or round apertures. Supplied in sheet from and cut to size, they can be bonded to rings the same as woven mesh. These mesh types are extremely hard wearing and stable in use. They do have a reduced open area so advice should be sought to ensure capacity rates can still be met. Available in most types of stainless steel, aluminium and carbon steel.

### Wedgewire Screens

Wedge-wire screens can be fabricated in a range of both flat panels and tubes. Wedge-wire and support profiles are resistance welded with accurate slot dimensions. The screens can be mechanically and electro-polished and given additional surface hardening treatments. Further support structures and fastening brackets, can be added. Tubes can have various end piece connections and additional internal strengthening.





# Mesh Service

Most meshes are now a bonded configuration and require a special jig to ensure optimum tension and aperture size integrity – the mesh is stretched along its warp and weft to a precise tension. Hand meshed systems cannot guarantee the size or shape of the aperture due to the stretching of the mesh from differing directions (diamond shaped holes, and irregular hole patterns).

All mesh used by Farleygreene conforms to ISO standards 4782, 4783 and 9044 to ensure quality and accuracy of our meshing service.

Mesh is usually supplied in 1220mm wide rolls and in linear length increments as required. 1020, 1530 & 2000mm wide rolls are available but only in certain apertures.

Farleygreene offer a full re-mesh/meshing service. Please ask for our mesh information charts for more details of mesh apertures available.

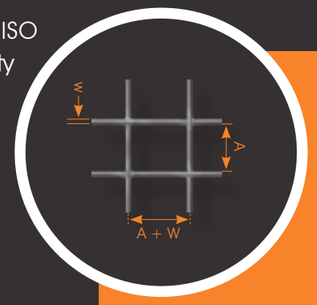


OPEN AREA (Fo) = .....%

$$Fo = \frac{A^2 \times 100}{(A + W)^2}$$

A = APERTURE SIZE
W = WIRE DIAMETER
A + W = PITCH

APERTURE SIZE X 1000 = MICRONS
MESH COUNT = HOLES PER LINEAR INCH

TABLE SHOWS TYPICAL SIZES ONLY
MANY MORE APERTURES ON REQUEST

| Aperture | Mesh | Wire dia | Open area % |
|---|---|---|---|
| 0.063 | 250 | 0.040 | 38 |
| 0.075 | 230 | 0.036 | 45.7 |
| 0.100 | 165 | 0.050 | 44.4 |
| 0.150 | 100 | 0.100 | 36 |
| 0.200 | 88 | 0.090 | 48 |
| 0.250 | 62 | 0.160 | 38 |
| 0.400 | 40 | 0.220 | 41 |
| 0.500 | 38 | 0.160 | 57.6 |
| 0.630 | 32 | 0.160 | 64 |
| 0.710 | 29 | 0.180 | 64 |
| 0.850 | 24 | 0.200 | 65.5 |
| 0.900 | 23 | 0.200 | 67 |
| 1.000 | 19 | 0.320 | 57.6 |
| 1.250 | 15.4 | 0.400 | 57.6 |
| 1.500 | 12 | 0.630 | 49.6 |
| 2.000 | 10 | 0.560 | 60 |
| 2.500 | 8.5 | 0.500 | 69.4 |
| 3.15 | 6.4 | 0.800 | 64 |
| 4.000 | 5.4 | 0.710 | 72 |
| 5.000 | 3.8 | 1.6 | 57.6 |
| 6.300 | 3.4 | 1.250 | 69.4 |
| 7.100 | 3 | 1.400 | 69.4 |
| 8.000 | 2.6 | 1.600 | 69.4 |
| 10.000 | 2.2 | 1.400 | 77 |
| 11.200 | 2 | 1.600 | 77 |
| 12.500 | 1.8 | 1.6 | 79 |
| 16.000 | 2 | 2.000 | 79 |

# Atex Directive

Almost all of our machines conform to the latest ATEX requirements. We can confirm the ratings of each range of our equipment during the design process.

Our technical section at the end of the brochure details which machines are certified for use in explosive atmospheres.

The tables below show some typical zoning and temperature figures.

| Zone | | A measure of the probability that a hazard may be present | | |
|---|---|---|---|---|
| Hazard present for hours per year | | [illegible] | >10 < 1000 | <10 |
| EU IEC | GAS | 0 | 1 | 2 |
| | DUST | 20 | 21 | 22 |
| US NEC | 505 Gas | 0 | 1 | 2 |
| | 500 Gas & Dust | Division 1 | | Div 2 |

| Dust Group | |
|---|---|
| Dust | Categories |
| Zone 20 | Category 1 |
| Zone 21 | Category 2 |
| Zone 22 | Category 3 |

| T Class | Classification by surface temp |
|---|---|
| T Class - IEC | Maximum temperature in °C |
| T1 | 450 |
| T2 | 300 |
| T3 | 200 |
| T4 | 135 |
| T5 | 100 |
| T6 | 85 |

## SM 200-S ARTISAN SIEVE

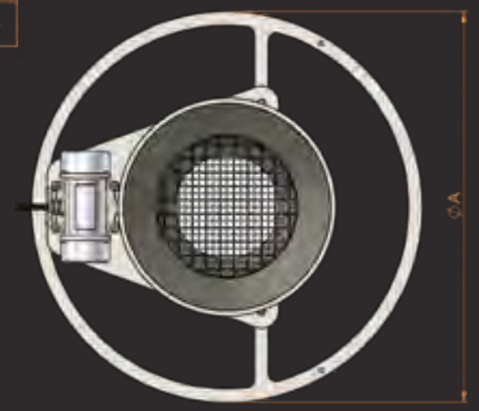

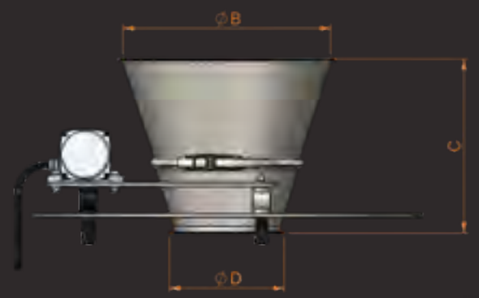


| DIMENSION | SM 200-S (mm) |
|---|---|
| A | 565 |
| B | 300 |
| C | 250 |
| D | 150 |

SCREEN DIAMETER = 200mm

BENCH MOUNT LEGS GIVE OUTLET HEIGHT @ 355mm FROM GROUND

| ELECTRICAL | SM200-S |
|---|---|
| VOLTAGE | 110 / 240 |
| FREQUENCY | 50 / 60 Hz |
| POWER | 45 W |
| PHASE | 1 |
| ATEX | NO |

## SM E-400-GRV & STV

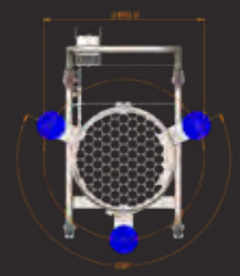

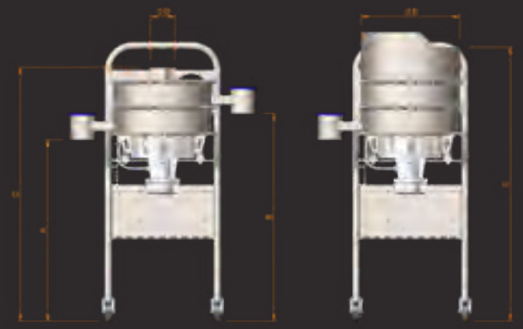

| DIMENSION (mm) | A | B | C | D |
|---|---|---|---|---|
| SM E-400-GRV | 735 | 840 | 1028 | 100 |
| SM E-400-STV | 735 | 840 | 1110 | 400 |

FOR UNDERSCREEN MAGNET, ADD 55 TO DIMENSION

| ELECTRICAL | SM E-400 |
|---|---|
| VOLTAGE | 110-240 / 380-460 |
| FREQUENCY | 50 / 60 Hz |
| POWER | 3 Phase 0.17kW / 0.17kW |
| PHASE | 1 / 3 |
| ATEX | YES |

## SM 500-S

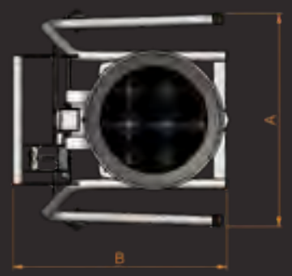

| DIMENSION | SM500-S (mm) |
|---|---|
| A | 800 |
| B | 800 |
| C | 500 |
| D | 300 |
| E | 450 |
| F | 750 |

SCREEN DIAMETER = 400mm

BESPOKE FRAMES AVAILABLE WITH DOL BOX, CABLE & PLUG

| ELECTRICAL | SM500-S |
|---|---|
| VOLTAGE | 110 / 240 / 380-460 |
| FREQUENCY | 50 / 60 Hz |
| POWER | 85 W |
| PHASE | 1 / 3 |
| ATEX | YES |

## SM SLIMLINE 550-FF & 950-ST

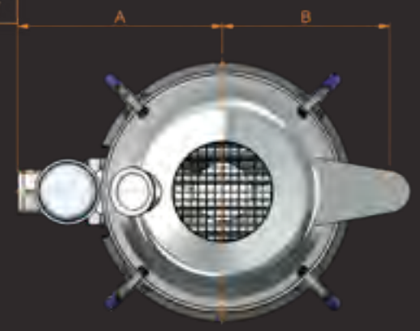

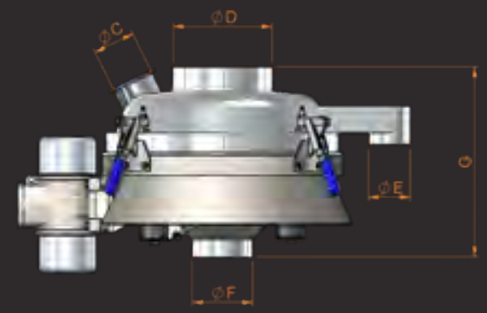


| DIMENSION | SM550-FF (mm) | SM950-ST (mm) |
|---|---|---|
| A | 510 | 755 |
| B | 415 | 665 |
| C | 100 (OPTIONAL) | 150 (OPTIONAL) |
| D | 150 - 530 | 150 - 900 |
| E | 100 (OPTIONAL) | 100/150 (OPTIONAL) |
| F | 150 - 300 | 150 - 400 |
| G | 400 * | 485 |

SCREEN DIAMETER = 565mm & 965mm

BESPOKE FRAMES AVAILABLE - BFM/JACOB ENDS CAN BE FITTED

*FOR SM550-FF WITH UNDERSCREEN MAGNET ASSY ADD 50mm TO 'G' DIM

ALLOW min. 50mm FOR FLEXIBLE CONNECTIONS TO INLET/OUTLET

| ELECTRICAL | SM550-FF | SM950-ST |
|---|---|---|
| VOLTAGE | 110 / 240 / 380-460 | 110 / 240 / 380-460 |
| FREQUENCY | 50 / 60 Hz | 50 / 60 Hz |
| POWER | 0.3 kW | 0.9 kW |
| PHASE | 1 / 3 | 1 / 3 |
| ATEX | YES | YES |

FOR SM550-FF OPEN TOP GALLERY REFER TO SM700-ST DRAWING

## SM SLIMLINE 1250-ST & 1550-ST

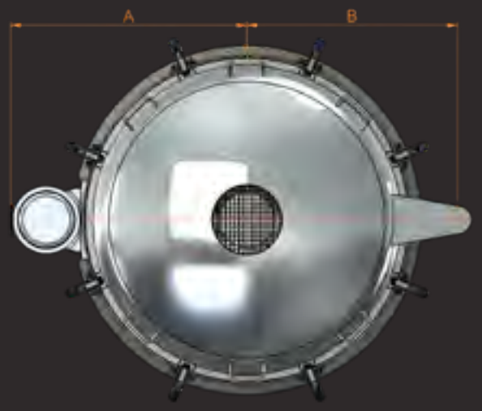

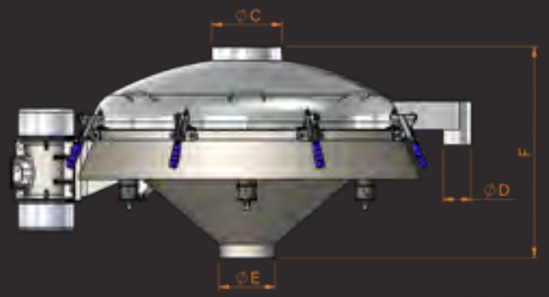


| DIMENSION | SM1250-ST (mm) | SM1550-ST (mm) |
|---|---|---|
| A | 842 | 1000 |
| B | 750 | 950 |
| C | 150 - 900 | 150 - 900 |
| D | 150 (OPTIONAL) | 150 (OPTIONAL) |
| E | 150 - 600 | 150 - 600 |
| F | 685 | 1010 |

SCREEN DIAMETER = 1165mm & 1465mm

BESPOKE FRAMES AVAILABLE - BFM/JACOB ENDS CAN BE FITTED

ALLOW min. 50mm FOR FLEXIBLE CONNECTIONS TO INLET/OUTLET

| ELECTRICAL | SM1250-ST | SM1550-ST |
|---|---|---|
| VOLTAGE | 110 / 240 / 380-460 | 110 / 240 / 380-460 |
| FREQUENCY | 50 / 60 Hz | 50 / 60 Hz |
| POWER | 0.9 kW | 1.1 kW |
| PHASE | 1 / 3 | 1 / 3 |
| ATEX | YES | YES |

## SM SLIMLINE 950 VS/PS

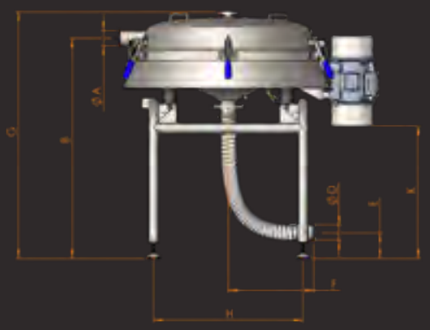


| DIMENSION | SM 950 VS/PS |
|---|---|
| A | DN75 DIN32676 |
| B | 1106 |
| C | 550 |
| D | DN75 DIN32676 |
| E | 250 |
| F | 431 |
| G | 1340 |
| H | 750 |
| I | 421 |
| J | 753 |
| K | 665 |

SCREEN DIAMETER = 965

FRAMES FOR SM950 DIFFER FROM UNIT SHOWN - FOR GUIDANCE ONLY

HOSE CONNECTIONS CAN BE MADE TO MATCH LINE

| ELECTRICAL | SM 950 VS/PS |
|---|---|
| VOLTAGE | 110-240 / 380-460 |
| FREQUENCY | 50 / 60 Hz |
| POWER | 0.35 kW |
| PHASE | 1 / 3 |
| ATEX | YES |

## SM SLIMLINE 550, 950 & 1250 VS/PS

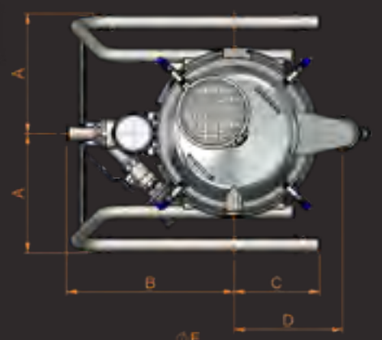


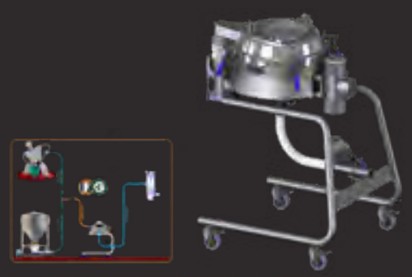

| | | | |
|---|---|---|---|
| A | 460 | 500 | 650 |
| B | 640 | N/A | N/A |
| C | 325 | N/A | N/A |
| D | 415 | 665 | 750 |
| E | 32 - 75* | 50 - 114* | 75 - 150* |
| F | 32 - 75* | 50 - 114* | 75 - 150* |
| G | 485 | 340 | 250 |
| H | 100 | 100 | 150 |
| I | 775 | 820 | 685 |

SCREEN DIAMETER = 565, 965 & 1165mm

**FRAMES FOR SM950 & 1250 DIFFER FROM UNIT SHOWN - FOR GUIDANCE ONLY

*HOSE CONNECTIONS CAN BE MADE TO MATCH LINE

| | | | |
|---|---|---|---|
| VOLTAGE | 110 / 240 / 380-460 | 110 / 240 / 380-460 | 110 / 240 / 380-460 |
| FREQUENCY | 50 / 60 Hz | 50 / 60 Hz | 50 / 60 Hz |
| POWER | 0.3 kW | 0.35 kW | 1.1 kW |
| PHASE | 1 / 3 | 1 / 3 | 3 |
| ATEX | YES | YES | YES |

## SM SLIMLINE 1250 VS/PS

| DIMENSION | SM 1250 VS/PS |
|---|---|
| A | DN100 DIN32676 |
| B | 1293 |
| C | 427 |
| D | DN100 DIN32676 |
| E | 250 |
| F | 538 |
| G | 1493 |
| H | 930 |
| I | 706 |
| J | 838 |
| K | 844 |

SCREEN DIAMETER = 1165mm

FRAMES FOR 1250 DIFFER FROM UNIT SHOWN - FOR GUIDANCE ONLY

HOSE CONNECTIONS CAN BE MADE TO MATCH LINE

| ELECTRICAL | SM 1250 VS/PS |
|---|---|
| VOLTAGE | 110-240 / 380-460 |
| FREQUENCY | 50 / 60 Hz |
| POWER | 1.1 kW |
| PHASE | 3 |
| ATEX | YES |

## SM EASILIFT 550 & 950

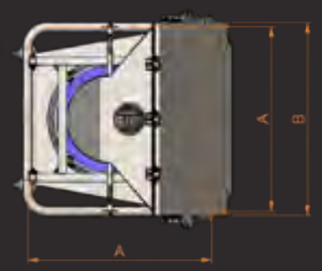

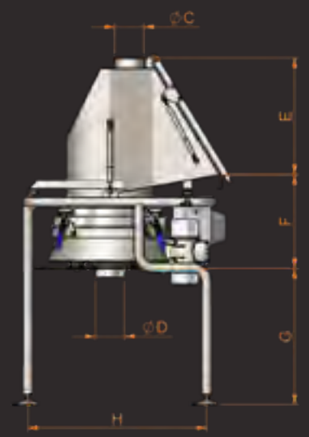


| DIMENSION | SM EASILIFT 550 (mm) | SM EASILIFT 950 (mm) |
|---|---|---|
| A | 1050 | 1300 |
| B | 1000 | 1250 |
| C | 150 | 150 |
| D | 150 - 300* | 150 - 400* |
| E | 610 | 610 |
| F | 510 | 632 |
| G | 300 - 1000* | 300 - 1000* |
| H | 900 | 1100 |

SCREEN DIAMETER = 565mm & 965mm

**FOR OUTLET HEGHTS OVER 450/300mm STEP MAY BE REQUIRED

*AVAILABLE WITH OUTLET SUITABLE FOR CONNECTION TO VACUUM LINE

| ELECTRICAL | SM EASILIFT 550 | SM EASILIFT 950 |
|---|---|---|
| VOLTAGE | 110 / 240 / 380-460 | 110 / 240 / 380-460 |
| FREQUENCY | 50 / 60 Hz | 50 / 60 Hz |
| POWER | 0.3 kW | 0.9 kW |
| PHASE | 1 / 3 | 1 / 3 |
| ATEX | YES | YES |

## SM EASILIFT 550 ULTRA

| DIMENSION | SM EASILIFT 550 ULTRA (mm) |
|---|---|
| A | 1050 |
| B | 250 |
| C | 1300 |
| D | 666 |
| E | 300-1000 |
| F | 150-900 |
| G | 900 |
| H | 1470 |
| I | 990 |
| J | 1170 |

SCREEN DIAMETER = 565mm

**FOR OUTLET HEGHTS OVER 450/300mm STEP MAY BE REQUIRED

*AVAILABLE WITH OUTLET SUITABLE FOR CONNECTION TO VACUUM LINE

| ELECTRICAL | SM EASILIFT 550 ULTRA |
|---|---|
| VOLTAGE | 110 / 240 / 380-460 |
| FREQUENCY | 50 / 60 Hz |
| POWER | 0.3 kW |
| PHASE | 1 / 3 |
| ATEX | YES |



## SM MULTISCREEN 800, 1200, 1500

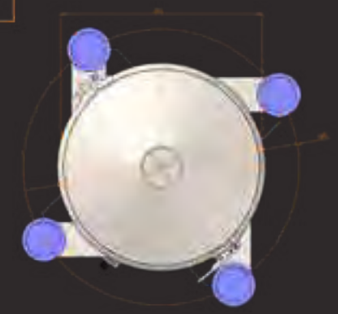

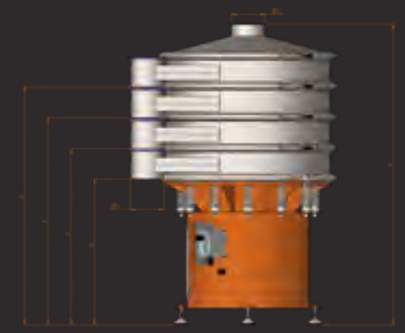

| DIMENSION (mm) | A | B | C | D | E | F | G | H | I |
|---|---|---|---|---|---|---|---|---|---|
| SM800-1S | 800 | 1100 | 150 | --- | --- | 815 | 675 | 1105 | 150 |
| SM800-2S | 800 | 1100 | 150 | --- | 960 | 815 | 675 | 1250 | 150 |
| SM800-3S | 800 | 1100 | 150 | 1105 | 960 | 815 | 675 | 1395 | 150 |
| SM1200-1S | 1170 | 1690 | 250 | --- | --- | 860 | 690 | 1210 | 200 |
| SM1200-2S | 1170 | 1690 | 250 | --- | 1035 | 860 | 690 | 1385 | 200 |
| SM1200-3S | 1170 | 1690 | 250 | 1210 | 1035 | 860 | 690 | 1560 | 200 |
| SM1500-1S | 1470 | 2030 | 250 | --- | --- | 890 | 690 | 1315 | 200 |
| SM1500-2S | 1470 | 2030 | 250 | --- | 1095 | 890 | 690 | 1520 | 200 |
| SM1500-3S | 1470 | 2030 | 250 | 1300 | 1095 | 890 | 690 | 1725 | 200 |

SCREEN DIAMETER = REFER TO 'A' DIM

FLEXIBLE CONNECTIONS TO INLET & OUTLETS - MOBILE VERSION AVAILABLE.

| ELECTRICAL | SM800 | SM1200 | SM1500 |
|---|---|---|---|
| VOLTAGE | 110 / 240 / 380-460 | 110 / 240 / 380-460 | 110 / 240 / 380-460 |
| FREQUENCY | 50 / 60 Hz | 50 / 60 Hz | 50 / 60 Hz |
| POWER | 0.53 / 0.67 kW | 0.90 / 1.05 kW | 2.15 / 2.70 kW |
| PHASE | 3 | 3 | 3 |
| ATEX | YES | YES | YES |

## SM 700-ST

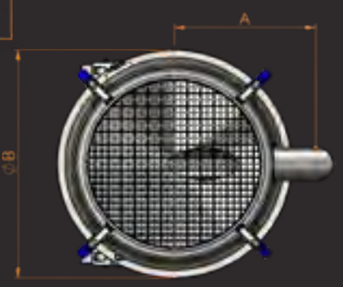

| DIMENSION | SM700-ST (mm) |
|---|---|
| A | 430 |
| B | 630 |
| C | 530 |
| D | 350* |
| E | 100 |
| F | 770 |

SCREEN DIAMETER = 565mm

ENCLOSED TOP & OVERSIZE OUTLET AVAILABLE (REFER TO SM550-FF DRG)

*FOR UNDERSCREEN MAGNET ASSY ADD 50mm TO 'D' DIM

ALLOW min. 50mm FOR FLEXIBLE CONNECTIONS TO INLET/OUTLET

| ELECTRICAL | SM700-ST |
|---|---|
| VOLTAGE | 110 / 240 / 380-460 |
| FREQUENCY | 50 / 60 Hz |
| POWER | 0.55 kW |
| PHASE | 1 / 3 |
| ATEX | YES |

## SM SEGREGATOR 42 & 53

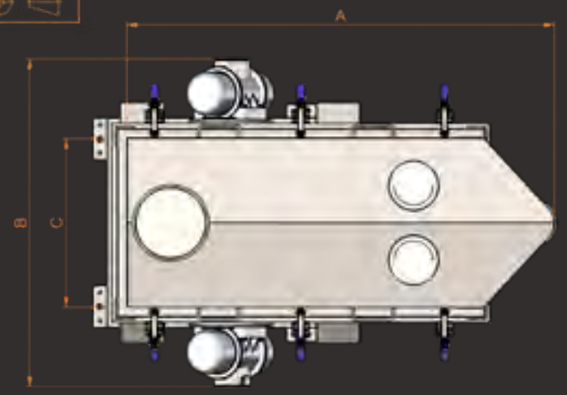


TYPICAL VERSION SHOWN - UNIT CAN BE OPEN OR ENCLOSED

| DIMENSION | SM SEG 42 (mm) | SM SEG 53 (mm) |
|---|---|---|
| A | 1550 | 1850 |
| B | 1160 | 1490 |
| C | 600 | 900 |
| D | 555 | 555 |
| E | 165 | 165 |
| F | 500 | 500 |

SCREEN SIZE = 1245 x 645mm & 1540 x 915mm

FOR ADDITIONAL DECKS ADD 180mm PER EXTRA SCREEN

BESPOKE FRAMES AVAILABLE - MOBILE OR STATIC

INLET & OUTLETS CONFIGURED TO SUIT INSTALLATION - TYPICAL VERSION SHOWN

| ELECTRICAL | SM SEG 42 | SM SEG 53 |
|---|---|---|
| VOLTAGE | 110 / 240 / 380-460 | 110 / 240 / 380-460 |
| FREQUENCY | 50 / 60 Hz | 50 / 60 Hz |
| POWER | 0.55 kW x 2 | 0.55 kW x 2 |
| PHASE | 3 | 3 |
| ATEX | YES | YES |

## SM R200-C

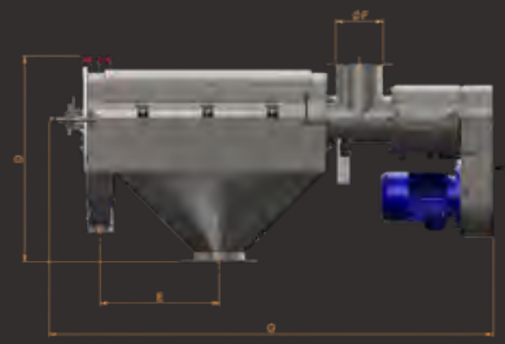


| DIMENSION | R200-C |
|---|---|
| A | 1004 |
| B | 852 |
| C | 480 |
| D | 795 |
| E | 460 |
| F | 193 |
| G | 1718 |

SCREEN SIZE = 790mm x Ø200mm LONG

BESPOKE FRAMES AVAILABLE - MOBILE OR STATIC

SUITABLE FOR USE WITH VACUUM OR PRESSURE LINES

OUTLET HOPPER CAN BE SUPPLIED TO SUIT INSTALLATION

| ELECTRICAL | R200-C |
|---|---|
| VOLTAGE | 240 / 380-460 |
| FREQUENCY | 50 / 60 Hz |
| POWER | 2.2 kW |
| PHASE | 3 |
| ATEX | YES |

## SM R200-ST & R200-ST-LB

| DIMENSION | R200-ST | R200-LB |
|---|---|---|
| A | 1085 | 1085 |
| B | 425 | 678 |
| C | 472 | 472 |
| D | 420 | 420 |
| E | 474 | 474 |
| F | 1513 | 1763 |
| G | 280 | 510 |
| H | 280 | 265 |

SCREEN SIZE = 790mm x Ø200mm LONG

BESPOKE FRAMES AVAILABLE - MOBILE OR STATIC

SUITABLE FOR USE WITH VACUUM OR PRESSURE LINES

OUTLET HOPPER CAN BE SUPPLIED TO SUIT INSTALLATION

| ELECTRICAL | R200-ST & R200-LB |
|---|---|
| VOLTAGE | 240 / 380-460 |
| FREQUENCY | 50 / 60 Hz |
| POWER | 2.2kW (ST) 3.0kW (LB) |
| PHASE | 3 |
| ATEX | YES |

## SM R200-DISINTEGRADER

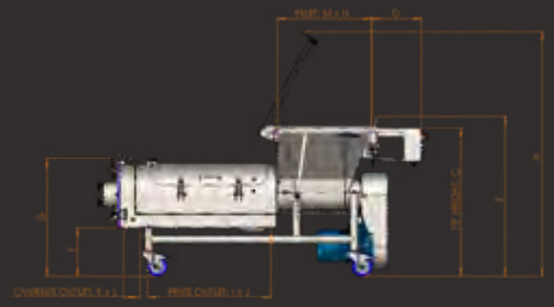

| DIMENSION | VALUE |
|---|---|
| A | [illegible] |
| B | [illegible] |
| C | [illegible] |
| D | [illegible] |
| E | [illegible] |
| F | [illegible] |
| G | [illegible] |
| H | [illegible] |
| I | [illegible] |
| J | [illegible] |
| K | [illegible] |
| L | [illegible] |
| M | [illegible] |
| N | [illegible] |

SCREEN SIZE = 790mm x Ø200mm LONG

BESPOKE FRAMES AVAILABLE - MOBILE OR STATIC

SUITABLE FOR USE WITH VACUUM OR PRESSURE LINES

OUTLET HOPPER CAN BE SUPPLIED TO SUIT INSTALLATION

| ELECTRICAL | R200-DST |
|---|---|
| VOLTAGE | 240 / 380-460 |
| FREQUENCY | 50 / 60 Hz |
| POWER | 3.0 kW |
| PHASE | 3 |
| ATEX | YES |

## SM R350-ST & R350-ST-LB

| DIMENSION | R350 | R350-LB |
|---|---|---|
| A | 1327 | 1327 |
| B | 597 | 1047 |
| C | 655 | 655 |
| D | 640 | 640 |
| E | 576 | 576 |
| F | 1924 | 2374 |
| G | 380 | 830 |
| H | 380 | 380 |

SCREEN SIZE = 990mm x Ø350mm LONG
BESPOKE FRAMES AVAILABLE - MOBILE OR STATIC
SUITABLE FOR USE WITH VACUUM OR PRESSURE LINES
OUTLET HOPPER CAN BE SUPPLIED TO SUIT INSTALLATION

| ELECTRICAL | R350 & R350-LB |
|---|---|
| VOLTAGE | 240 / 380-460 |
| FREQUENCY | 50 / 60 Hz |
| POWER | 4.0 kW |
| PHASE | 3 |
| ATEX | YES |

**Farleygreene Limited,** Unit 2, Hatch Industrial Park, Greywell Road,
Mapledurwell, Hampshire RG24 7NG, United Kingdom

**t** +44 (0) 1256 474 547
**f** +44 (0) 1256 329 596
**e** info@farleygreene.com

farleygreene.com
Company No: 1243329

Distributed by:

Copyright © 2019 Issue A 01.19